N4504-44 Tape Recorder

Service
Service
Service

ServiceManual

PHILIPS HIGH FIDELITY LABORATORIES, LTD.

SERVICE DEPT. P.O.BOX 2208 FORT WAYNE, INDIANA 46801

PHILIPS

JG1277
Philips High Fidelity Laboratories, Ltd., 1977
Printed in U.S.A.

www.hifiengine.com

TABLE OF CONTENTS

Description	Page
Specifications	1
Controls & Connections	1 & 2
Disassembly Instructions	3 & 4
Minor Repair Hints	4
Mechanical Adjustments	5-8
Electrical Measurements & Adjustments	8-10
Circuit Description	10-14
Maintenance	24
Mechanical Replacement Parts List	27
Electrical Replacement Parts List for the Chassis and Main Board	27 & 28
Electrical Replacement Parts List for the Tape Tension Board	29
Electrical Replacement Parts List for the Tacho Board	29
Electrical Replacement Parts List for the DNL Board	29

LIST OF ILLUSTRATIONS

Figure		Description	Page
1	-----	Controls & Connections	1
2	-----	AC Cord	3
3	-----	Input and Output Connections	3
4	-----	Chassis Removal	3
5	-----	Chassis Rear View	4
6	-----	Reel Disc Height Adjustment	5
7	-----	Tape Tension Arms Adjustment	5
8	-----	Tape Guides Adjustment	5
9	-----	Pressure Roller Adjustment	6
10	-----	Capstan Adjustment	6
11	-----	Tape Head Adjustment	6
12	-----	Tape Head Adjustment	6
13	-----	Tape Head Height Adjustment	7
14	-----	Mechanical Brake Adjustment	8
15	-----	Auto-Off Solenoid Adjustment	8
16	-----	Switch Slide Adjustment	8
17	-----	Frequency Response Adjustment Chart	9
18	-----	Record Bias Adjustment Chart	10
19	-----	N4504 Exploded View	15 & 16
20	-----	N4504 Wiring Diagram	17 & 18
21	-----	N4504 Audio Schematic	19 & 20
22	-----	N4504 Power Supply Schematic	21
23	-----	N4504 Motor Control Schematic	21
24	-----	N4504 Wiring Diagram	23
25	-----	DIN Connector Chart	24
26	-----	Maintenance Guide	24
27	-----	Main P.C. Board Overlay	25 & 26
28	-----	Tacho P.C. Board Overlay	25
29	-----	Tape Tension P.C. Board Overlay	25
30	-----	DNL Circuit Schematic	26
31	-----	DNL P.C. Board Overlay	26

www.hifiengine.com

N4504/44 TECHNICAL SPECIFICATIONS

Line Voltage	117V
Line Frequency	60Hz
Primary Current	Approx. 0.5A
Frequency Range (acc. to NAB)	
19 cm/s (7½ ips)	35-26,000Hz
9.5 cm/s (3¾ ips)	35-20,000Hz
4.75 cm/s (1 7/8 ips)	35-11,500Hz
Signal-to-Noise Ratio (acc. to NAB, without DNL)	
19 cm/s (7½ ips)	≥60dB
9.5 cm/s (3¾ ips)	≥60dB
4.75 cm/s (1 7/8 ips)	≥58dB
Improvement of the Signal to Noise Ratio in the 4,000-14,000 Hz Range using the DNL (via a 5.6 KHz HP Filter--18dB/Oct)	≥10dB
Wow and Flutter WRMS (acc. to NAB)	
19 cm/s (7½ ips)	≤ 0.05%
9.5 cm/s (3¾ ips)	≤ 0.07%
4.75 cm/s (1 7/8 ips)	≤ 0.2%
Maximum Speed Deviation	≤ ±1%
Maximum Reel Diameter	18 cm (7")
Number of Tracks	4
Number of Heads	3 (1 Record, 1 Playback, and 1 Erase)
Number of Motors	3 (1 for Capstan, 2 for Reel Discs)
Tape Speeds	19 cm/s (7½ ips), ±1% 9.5 cm/s (3¾ ips), ±1% 4.75 cm/s (1 7/8 ips), ±1%
Winding Time for an 18 cm (7 in.)Reel with LP Tape, 540m (1800 ft.)	≤ 180s
Output Impedance	
Headphone	600 Ohms
Nominal Input Sensitivity	
Microphones	0.2mV/2K Ohms
Line In (Pin Jacks)	100mV/1M Ohms
Nominal Output Voltage	
Line Out (Pin Jacks)	250mV/5K Ohms, Load Impedance ≥50K Ohms
DIN Connector, Line In/Line Out	
Nominal Input Sensitivity	
Pins 1 & 4	2mV/20K Ohms
Pins 3 & 5	100mV/1M Ohms
Nominal Output Voltage	
Pins 3 & 5	250mV/5K Ohms, Load Impedance ≥50K Ohms
DIN Connector, Monitor	
Nominal Output Voltage	
Pins 3 & 5	250mV/5K Ohms, Load Impedance ≥50K Ohms

CONNECTIONS AND CONTROLS
(See Figures 1,2 & 3)

1. **Reel Spindles with locks**—Rotating reel locks are used to hold the reels in place when the unit is in the upright position.

2. **Tape Tension Arms**—These levers prevent tape breakage by controlling the tension on the tape, and absorbing the shock during starts and stops.

3. **Counter**—By resetting the counter at the beginning of a tape, accurate indexing and quick access to individual recordings is possible.

4. **Zero Reset Button for Counter**—This button is used to reset the counter to zero at the beginning of each tape.

5. **Tape Slot**—By placing the tape in this slot while threading the tape recorder, the tape is automatically positioned correctly in the tape transport mechanism.

6. **Power On/Off Switch**—This switch applies power to the unit when switched on.

7. **Power On/Off Indicator**—This indicator lights to show that power is being applied to the unit.

8. **Recording Level Meter (Left Channel)**—This meter indicates the strength of the left channel signal either as it is applied to the recording head, or as it is reproduced by the playback head (see Monitor Selector Switch).

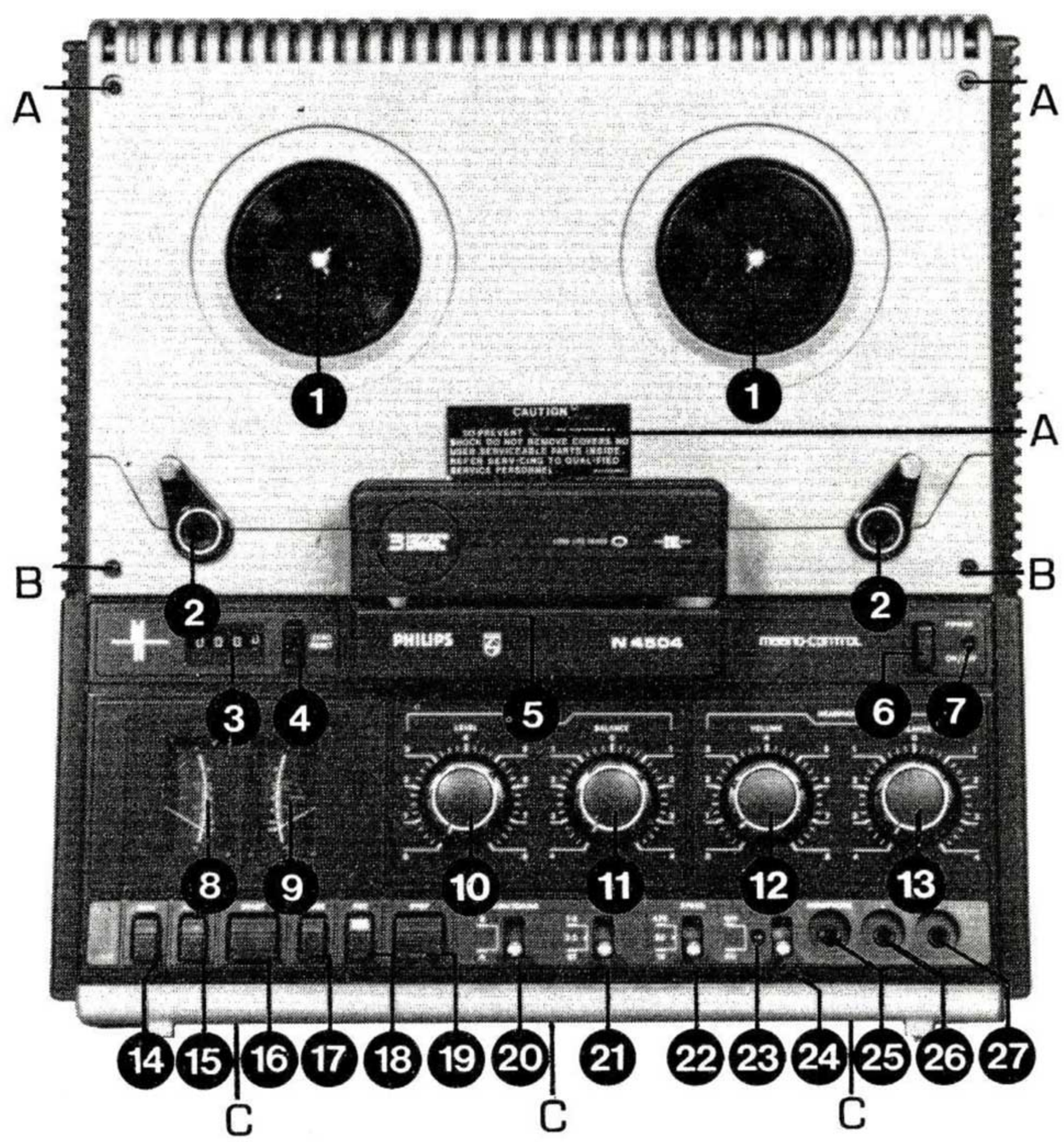

Figure 1

www.hifiengine.com

9. **Recording Level Meter (Right Channel)**—This meter indicates the strength of the right channel signal either as it is applied to the recording head, or as it is reproduced by the playback head (see Monitor Selector Switch).

10. **Recording Level Control**—This control varies the strength of the signals applied to the recording head.

11. **Recording Level Balance Control**—When recording a stereo signal this control is used to equalize (balance) the strength of the left and right channel signals being applied to the recording head.

12. **Headphone Volume Control**—This control is used to vary the strength of the signals present at the headphone jack.

13. **Headphone Balance Control**—This control is used to equalize (balance) the strength of the left and right channel signals present at the headphone jack.

14. **Rewind Key**—Depressing this key will cause the tape to rapidly rewind onto the supply reel, (sound is muted).

15. **Wind (Fast Forward) Key**—Depressing this key will cause the tape to rapidly wind onto the take-up reel, (sound is muted).

16. **Start Key**—Depressing only this key will play back a recorded tape. Depressing this key along with the Record Key causes the signal on the tape to be erased and the signal present at the Line In jacks (or Microphone jacks) to be recorded in its place.

17. **Pause Key**—Depressing this key interrupts tape travel during the playback and recording modes. When recording, the 'before tape' signal may still be monitored by placing the Monitor switch in the 'B' position.

18. **Record Key**—Depressing only this key allows the 'before tape' signal to be monitored by placing the Monitor switch in the 'B' position. Depressing this key along with the Start Key causes the signal on the tape to be erased and the signal present at the Line In jacks (or Microphone jacks) to be recorded in its place.

19. **Stop Key**—Depressing this key releases all other function keys (except pause) and stops the tape.

20. **Monitor Selector Switch**—The position of this switch determines whether the signal being monitored is 'before tape' (B) or 'after tape' (A). The 'before tape' signal is the signal being applied to the record head. The 'after tape' signal is the signal reproduced by the playback head immediately after being placed on the tape by the record head.

21. **Track Selector Switch**—The position of this switch determines which track or tracks on the tape will be used during the recording and playback operations.

22. **Speed Selector Switch**—The position of this switch determines at what speed the tape is driven by the capstan, as follows: 4.75 cm/s = 1 7/8 i.p.s.; 9.5 cm/s= 3 3/4 i.p.s.; and 19 cm/s=7 1/2 i.p.s.

23. **DNL Indicator Lamp**—This indicator lights to show that the DNL circuits are operating.

24. **DNL Switch**—This switch is used to activate the DNL circuits. The DNL circuits affect the signal only after it has been reproduced by the playback head, therefore, it has no effect on the signals during recording.

25. **Stereo Headphone Jack**—By connecting a pair of stereo headphones to this jack it is possible to listen to the reproduced signal while playing back a tape. It is also possible to monitor the signal either 'before tape' or 'after tape' while recording.

26. **Microphone Jack (Left Channel)**—By connecting a microphone to this jack it is possible to place information on the left channel of a stereo recording. During mono recordings both microphone jacks are operational.

27. **Microphone Jack (Right Channel)**—By connecting a microphone to this jack it is possible to place information on the right channel of a stereo recording. During mono recordings both microphone jacks are operational.

28. **AC Line Cord**

29. **Line In/Out DIN Socket**—This socket is used to make the input and output connection when the tape recorder is being used with equipment employing DIN connectors.

30. **Line Out Jack (Right Channel)**—This jack supplies the right channel output signal during playback. While recording, the Monitor switch determines whether the 'before tape' or 'after tape' signal is present at the jack.

31. **Line Out Jack (Left Channel)**—This jack supplies the left channel output signal during playback. While recording, the Monitor switch determines whether the 'before tape' or 'after tape' signal is present at the jack.

32. **Line In Jack (Right Channel)**—A signal applied to this jack is recorded as the right channel when making a stereo recording. During mono recordings both line in jacks are operational.

33. **Line In Jack (Left Channel)**—A signal applied to this jack is recorded as the left channel when making a stereo recording. During mono recordings both line in jacks are operational.

34. **Monitor DIN Socket**—This socket is used when the monitoring equipment employs DIN connectors.

35. **Remote DIN Socket**—By connecting a remote control unit to this socket, remote operation of the Pause function is possible while recording or playing back a tape. When using the Remote socket the Pause key must be depressed.

www.hifiengine.com

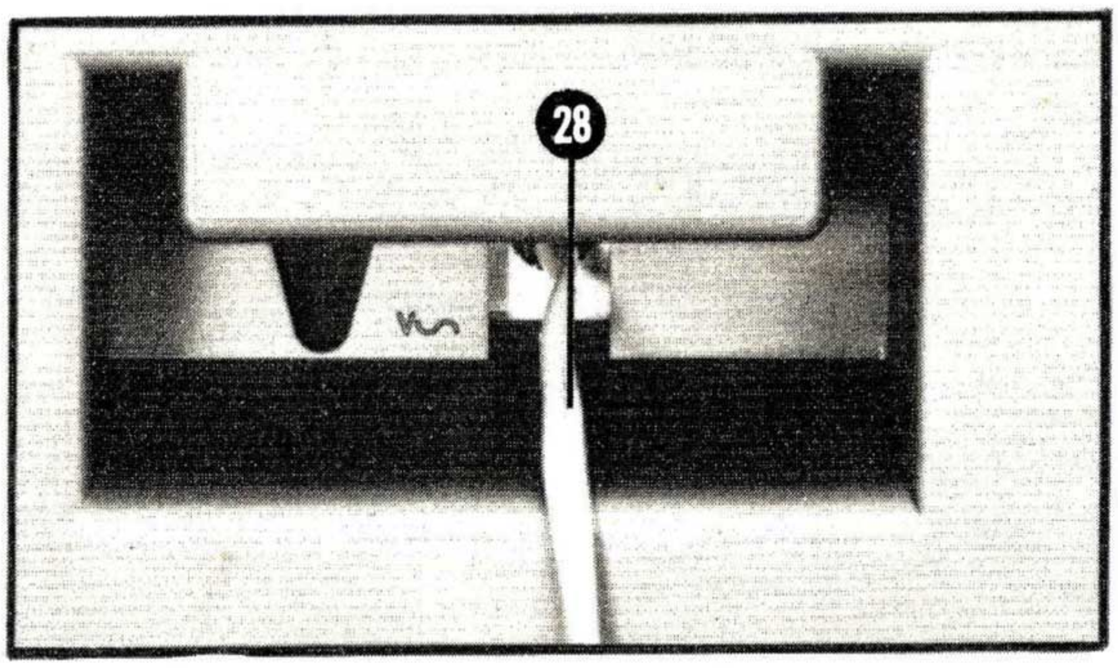

Figure 2

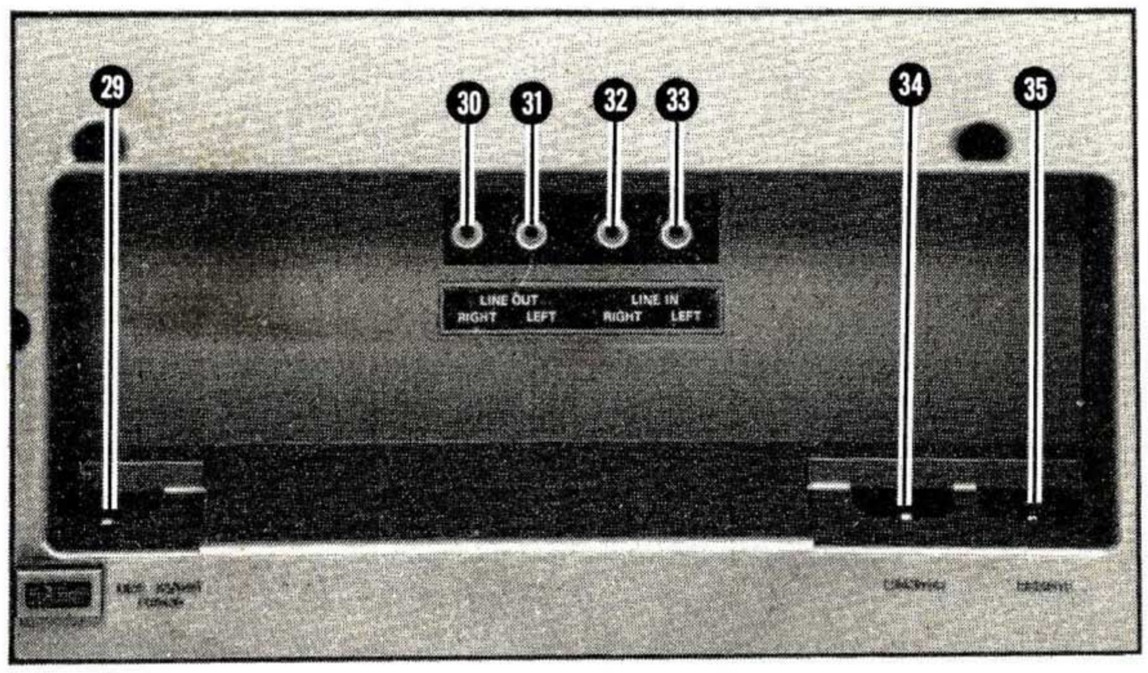

Figure 3

DISASSEMBLY INSTRUCTIONS (REFER TO FIGURES 1, 4, & 19)

Chassis Removal

1. Remove the 3 screws labeled (A) and the 2 screws labeled (B).
2. Turn the Tape Tension Arms (2) inward and pull them away from the cabinet as far as possible; turn the arms outward to their stops and release. When released the tape tension arms should remain in this position.
3. Lift the top half of the cabinet front and slide it out from under the tape tension arms.
4. Remove the three screws labeled (C) from the cabinet bottom. Also, remove the control knobs (10, 11, 12, and 13).
5. Remove the bottom half of the cabinet front by sliding it out from under the tape tension arms.
6. Remove the seven screws labeled (D) from the chassis.
7. Lift the chassis from the cabinet back.

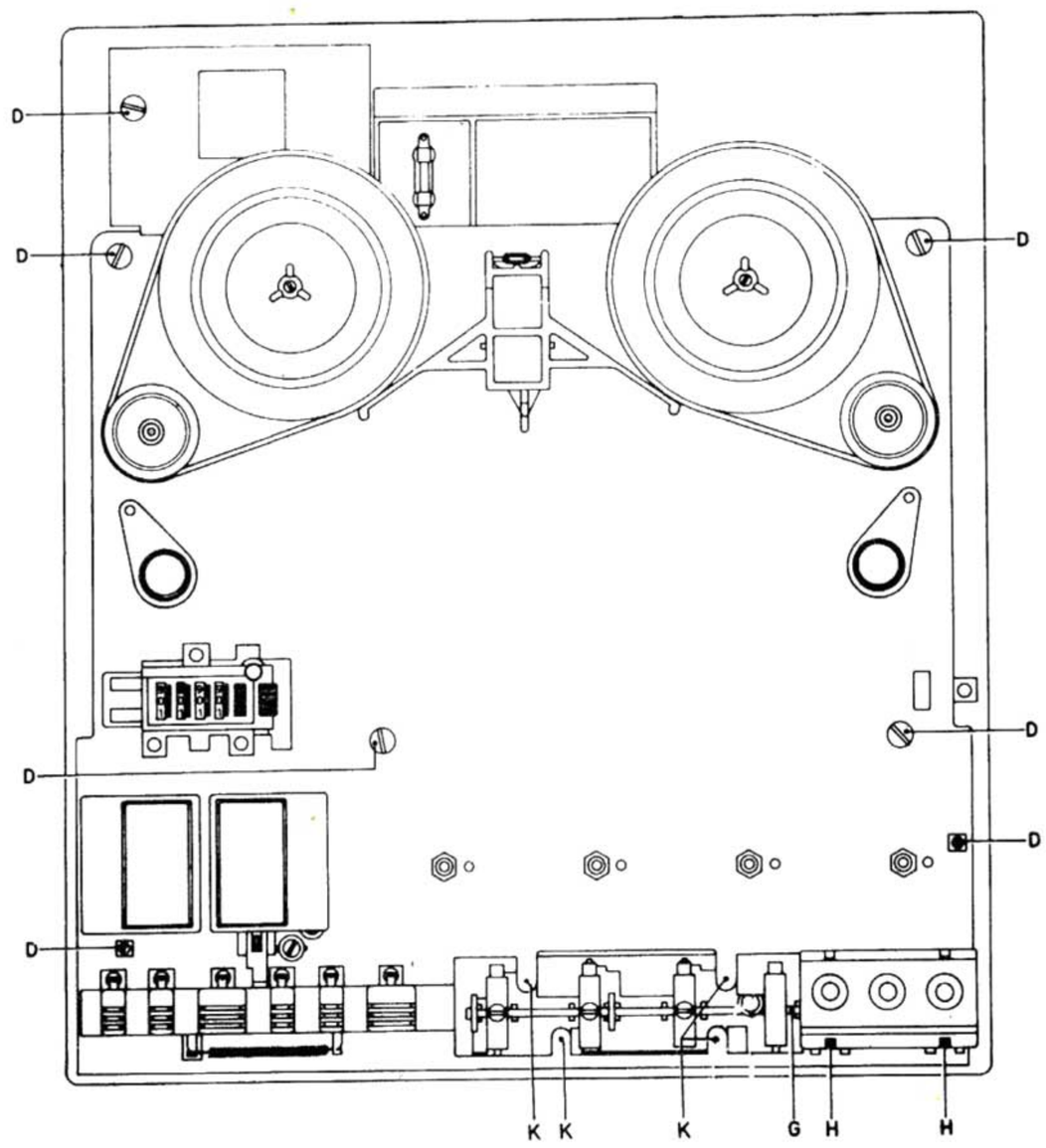

Figure 4

Microphone and Headphone Jack Removal

1. Remove the bottom half of the cabinet front, (see Chassis Removal).
2. Carefully bend the hooks (H) holding the jackplate.
3. Remove the jackplate by lifting it out from under the bent hooks.
4. Remove the jacks by unbending the tabs on the metal jackplate.

P.C. Board Removal (see Switch Slide and Control Key Removal, Steps 1 thru 5)

Switch Lever (20, 21, 22 and 24) Removal

1. Remove the Microphone/Headphone jackplate.
2. Unfasten the linkage rod connected to the defective switch lever.
3. Pull shaft (G) to the right far enough to allow the removal of the defective switch lever. (**Note:** for removal of levers 22 and 24 the chassis must be removed from the cabinet back.

Switch Slide and Control Key Removal

1. Remove the chassis from the cabinet.
2. Unfasten the linkage rods of all the control keys by snapping them out of the slots in the bottoms of the keys.
3. Remove the four screws (K) mounting the switch lever assembly to the chassis.
4. Remove the cardboard shield and the P.C. board center support from under the P.C. board.
5. Free the P.C. board from the chassis by removing the four screws securing it.

www.hifiengine.com

6. The P.C. board may now be positioned to allow easy removal of the control keys and the switch slides they operate. (**Note:** after removing the button and return spring from the defective key, it may be necessary to depress the stop button while pulling the defective key from the rear). If the 'Pause' key is being removed the wire spring mounted to the front post of the return spring, must be carefully lifted at its free end. This step is also necessary when replacing the 'Pause' key.

7. For removal of the switch slides operated by the switch levers, remove the screw securing the switch lever assembly to its mounting bracket and swing the assembly below the board. By unfastening the appropriate linkage rod the defective switch slide can now be removed.

Tape Tension Arm Removal

1. Remove the chassis from the cabinet.

2. Remove the tension spring or springs from the arm.

3. Remove the C-clip, washers, spring, and plastic discs from the rear of the assembly. (**Note:** Do not separate the plastic disc; replacement discs are supplied assembled).

4. The tape tension arm can now be removed. (Do not lubricate the rollers of the tape tension arms).

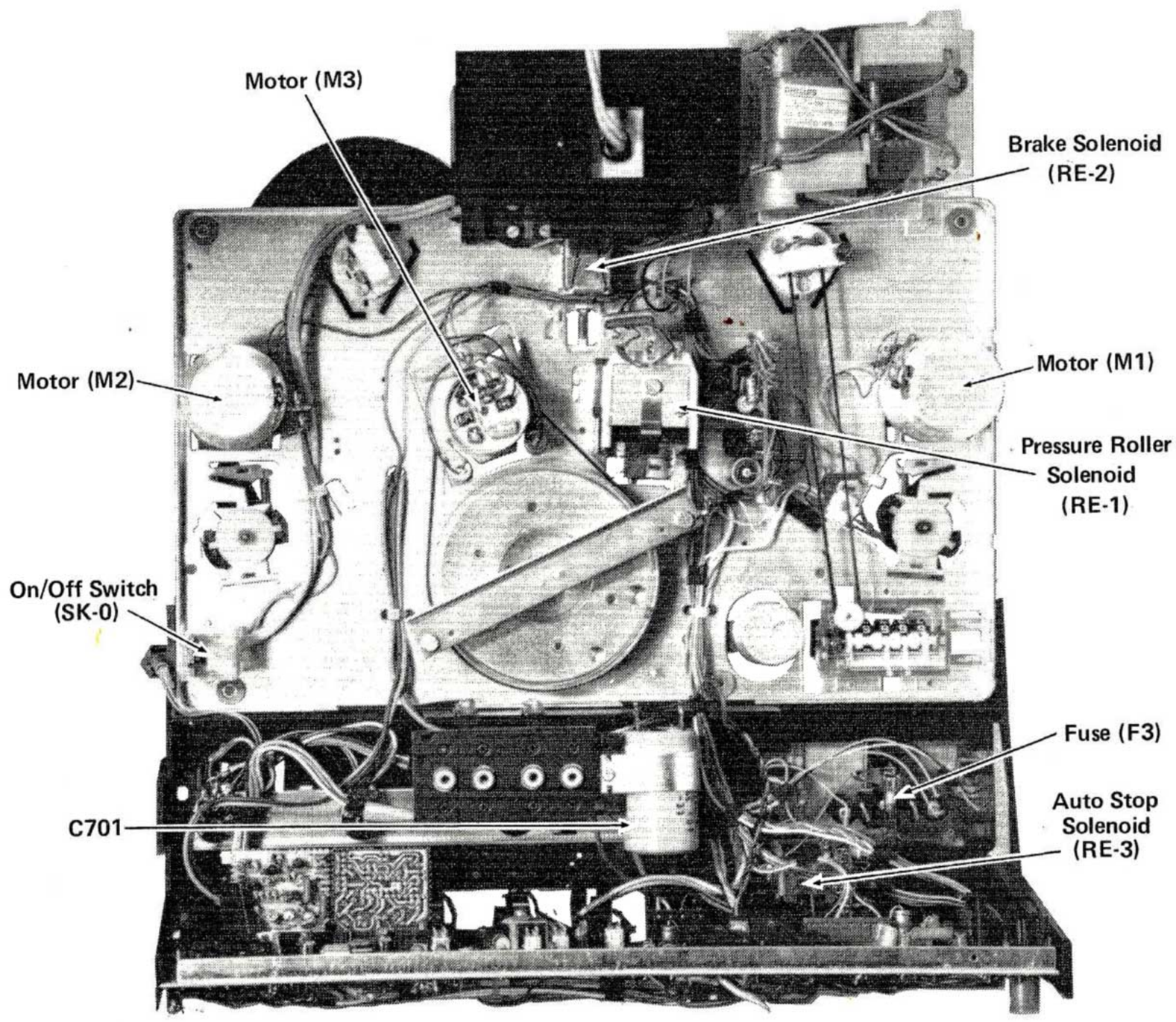

Figure 5 N4504 CHASSIS REAR VIEW

MINOR REPAIR HINTS

Fuse Replacement

The 2 amp fuse in the secondary of the power transformer is located next to the power transformer and can be reached by removing the upper half of the cabinet front.

The 300 mA fuse in the primary of the power transformer is located directly between and behind the level meters. To replace this fuse the chassis must be removed from the cabinet.

Level Meter Lamp Replacement

To reach the lamps which illuminate the level meters, remove the lower half of the cabinet front and pull the meters away from the chassis. The lamps may now be removed by unscrewing them from their sockets.

Replacement of the DNL and Power LED Indicators

Remove the lower half of the cabinet front. Remove the retaining clip from the defective LED by spreading the fingers of the clip and pulling it away from the chassis. Pull the LED from its mounting slot and unsolder the leads, noting which electrode is connected to which lead. The large electrode on the LED is the cathode. If the leads are not long enough to allow easy servicing, the chassis should be removed from the cabinet. The LED must be connected correctly in order to operate.

www.hifiengine.com

CAUTION: Do not use magnetized screwdrivers. Secure screws and nuts with lacquer after adjustment.

Tools and Instruments Required:

Caliper gauge
Set Feeler Gauge
Spring Pressure Meter, 3.30g
Spring Pressure Meter, 50-500g
Spring Pressure Meter, 300-3000g
Multimeter
AC VTVM
LF Generator

TAPE THREADING ADJUSTMENTS

Reel Disc (Figure 6)

The distance between the top of the reel disc and the mounting plate should be 15.35mm (39/64 in.). To measure this, lay a ruler with thickness A' flat on the reel disc, and measure from the mounting plate to the top of the ruler. The distance measured should be 15.35mm plus A' the thickness of the ruler. Alternately, the 15.35mm may be measured directly to the bottom of the ruler using inside calipers. When measuring, the reel disc shaft should be pressed against the thrust bearing. To change the reel disc height adjust screw D.

Adjust ring B so the axial play (gap C) of the reel disc is between 0.1mm and 0.2mm.

Pulley of the Reel Disc Motor (Figure 6)

The height of the pulley should be such that the drive belt is placed in the middle of the running surface on the reel disc. Adjustments can be made by moving the pulley on the motor shaft after loosening screws E.

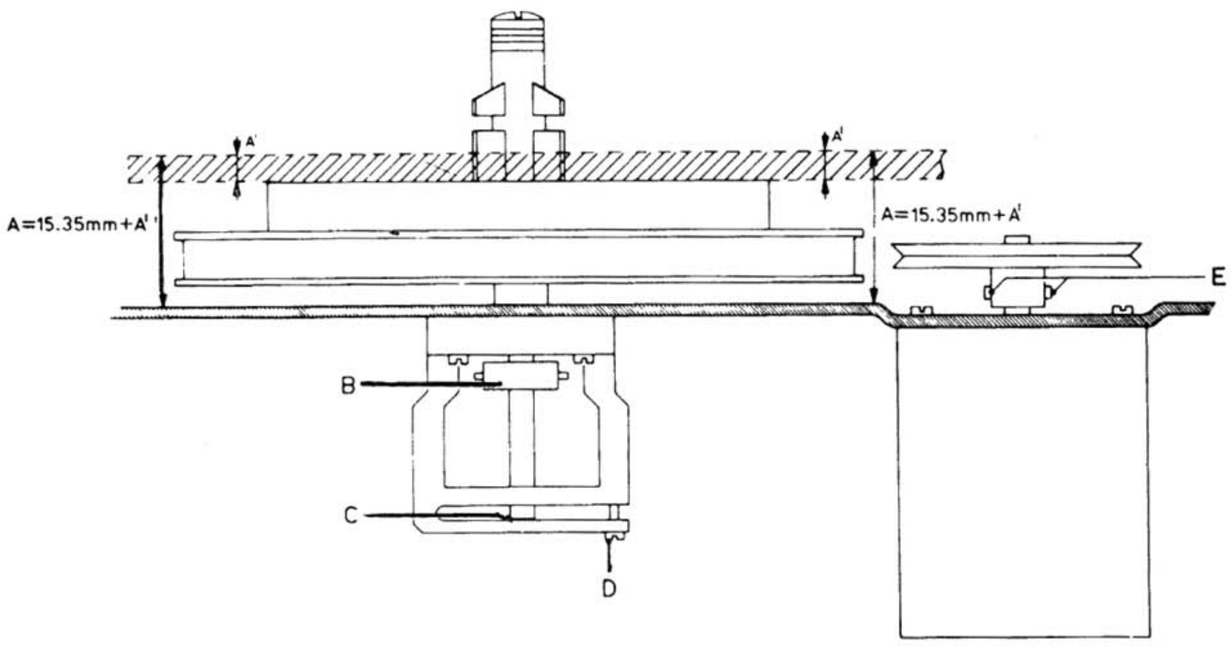

Figure 6

Tape Tension Arms (Figure 7)

Left Tape Tension Arm

The contacts of the tape tension switch, SK13, should open when 65-70 grams (2.27-2.45 oz.) of force is applied to the pin on the tape tension arm. This can be adjusted by bending tag A.

Right Tape Tension Arm

The force on the pin of the tape tension arm should be 90-95 grams (3.15-3.32 oz.) just before the tape tension arm touches stop B. This can be adjusted by bending tag A.

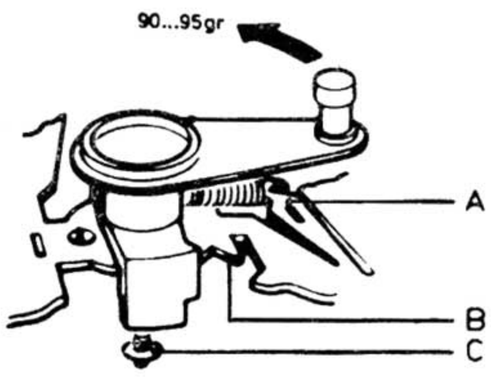

Figure 7

Tape Guide (Figure 8)

Check the height of the reel discs. Check that the erase head and contacts for the automatic switch-off are mounted correctly.

Adjust nut B so that a tape being played runs free of the guides, (the edges of the tape should not touch the shoulders of the guides).

With the pressure roller solenoid de-energized the distance between the tape and the heads should be 1mm to 1.5mm. To adjust, bend the tape lifter pins.

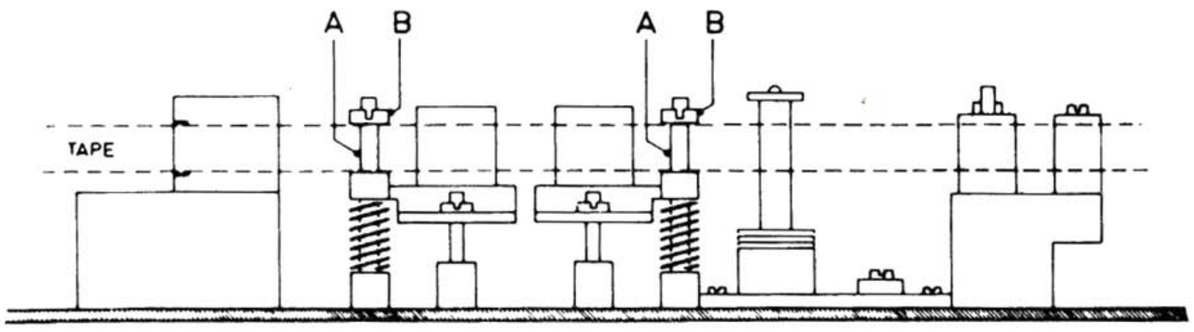

Figure 8

Pressure Roller (Figure 9)

Bend the pressure roller bracket at point F so that the pressure roller is parallel with the capstan.

Position C-clip G so that the axial play of the pressure roller is 0.1mm to 0.2mm. Bend tag E so that the distance between the capstan and the pressure roller is 12mm (15/32 in.) when the pressure roller relay is de-energized.

Bend tag B so that the force holding the pressure roller away from the capstan is 25-30 grams (0.88-1.05 oz.).

Adjust nuts D so that the distance between the upper nut and ring C is 0.1mm to 0.2mm when the pressure roller relay is energized. Adjust nuts A so that the force holding the pressure roller on the capstan is 1000 grams ±50 grams (35 oz. ± 1.75 oz.), when the pressure roller relay is energized.

Pressure Felt (Figure 9)

Replace the pressure felt when it becomes hard. The felt is supplied separately and should be glued on the bracket in such a way that the record gap is in the center of the felt. **(Warning: Take care that no glue remains on top of the felt).**

The force of the felt against the recording head should be 10 grams ± 7 grams, measured at the felt. This adjustment is made by moving spring H in one of the slots K. With the pressure roller relay de-energized the felt pad bracket should not be in the tape path.

www.hifiengine.com

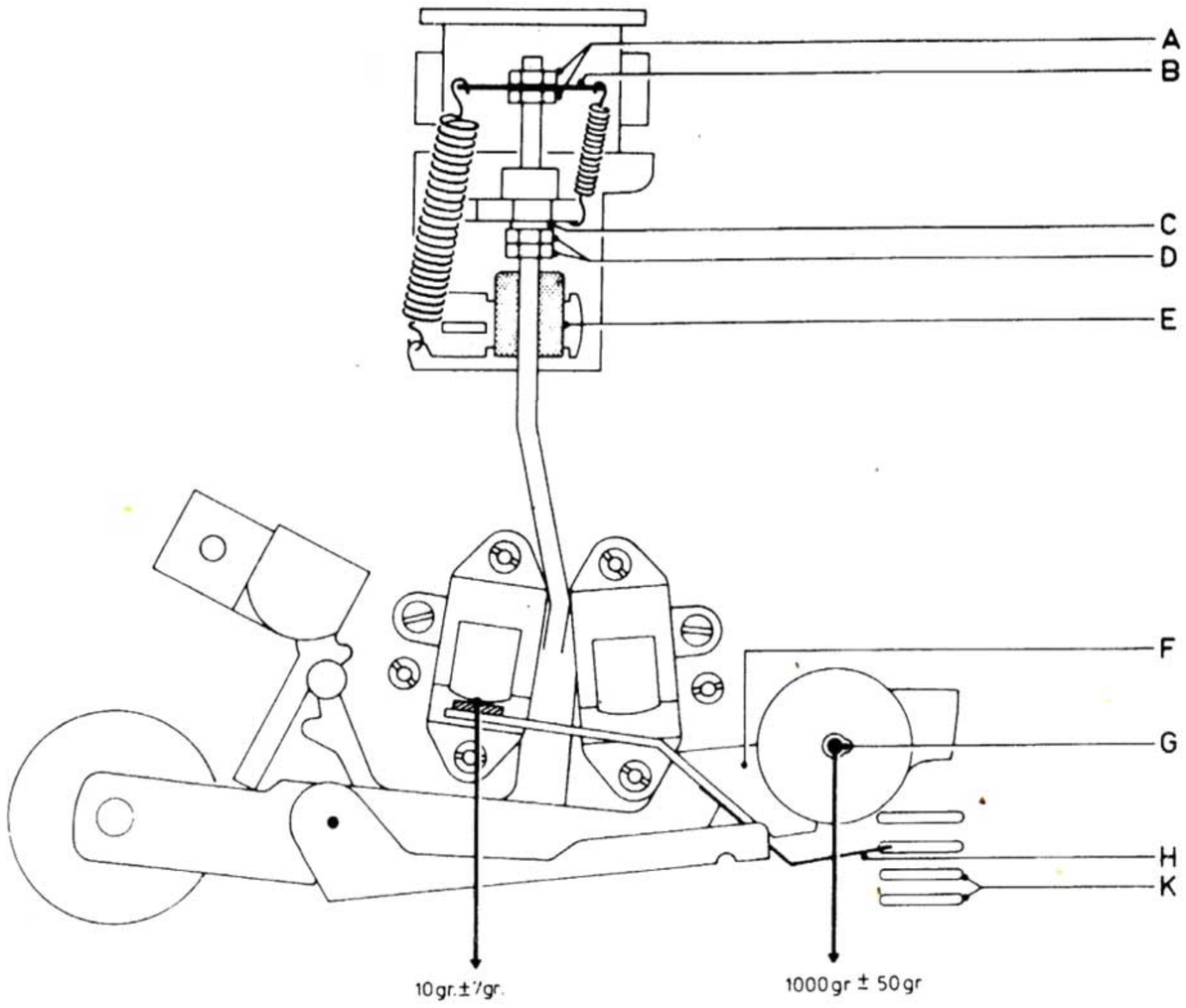

Figure 9

Capstan (Figure 10)

Bend spring C so that the force of the stop on the capstan is 100-200 grams (3.5-7 oz.). Place the oil-retaining rings so that the distance between the rings and the bearing is 0.5mm to 1mm.

Adjust the capstan bearing so that the tape runs smoothly in the center of the tape guide ahead of the capstan. The tape should also run smoothly in the center of the foil sensor/guide after the capstan. (The tape guides must be adjusted correctly).

To adjust the capstan:

1. Tighten screws A.
2. Loosen screw E.
3. Play a tape at 19 cm/s.
4. Adjust screw D until the tape runs free of the shoulders on the tape guide and foil sensor/guide.
5. Tighten screw E to secure the adjustment.

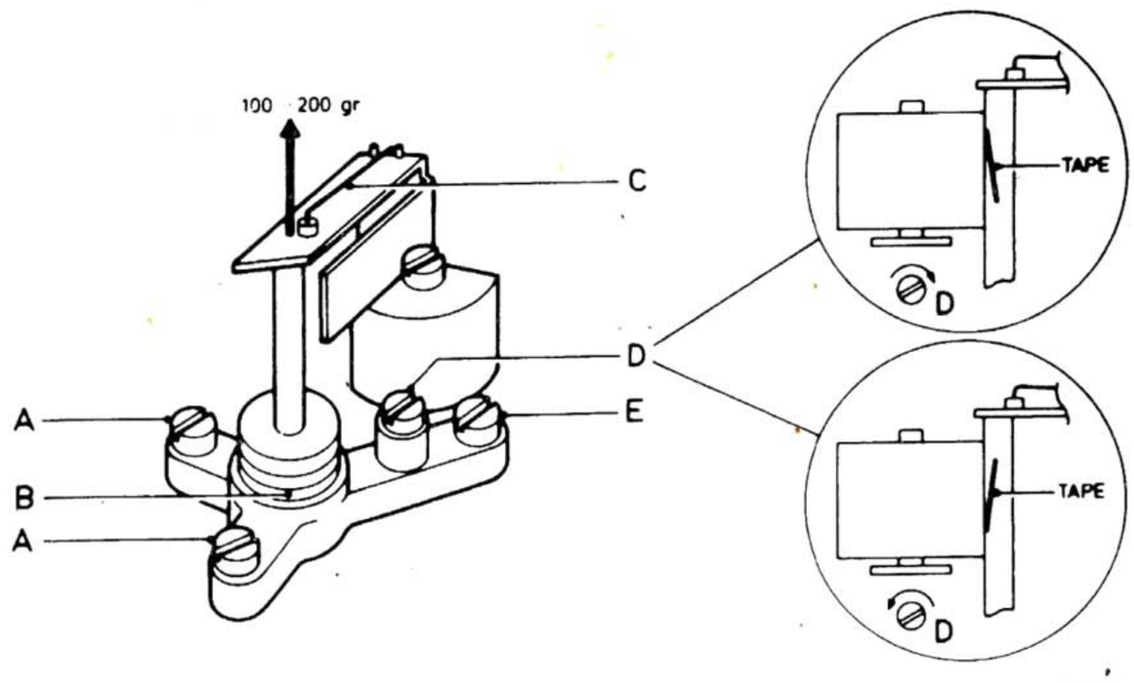

Figure 10

HEADS

IMPORTANT NOTE: Always clean and demagnetize all heads and tape-handling parts prior to using a test tape, to prevent damage to the tape and to produce correct adjustments and readings.

For optimal playback results and minimal wear of the heads it is essential that the recording and playback heads are correctly adjusted. Since the tape path may very by recorder and heads are manufactured with certain tolerances, it is necessary to adjust the heads whenever one is replaced.

The mechanical adjustment of the heads consists of four separate adjustments, (see Figure 11).

A. **Head Inclination:** Wrong adjustment causes the head to wear on one side and results in poor tape-head contact.

B. **Head Angle (Tangential Adjustment):** Wrong adjustment causes poor tape-head contact.

C. **Head Height:** Wrong adjustment results in signal losses and possible overlapping of two tracks.

D. **Head Azimuth:** Wrong adjustment results in loss in the higher frequencies.

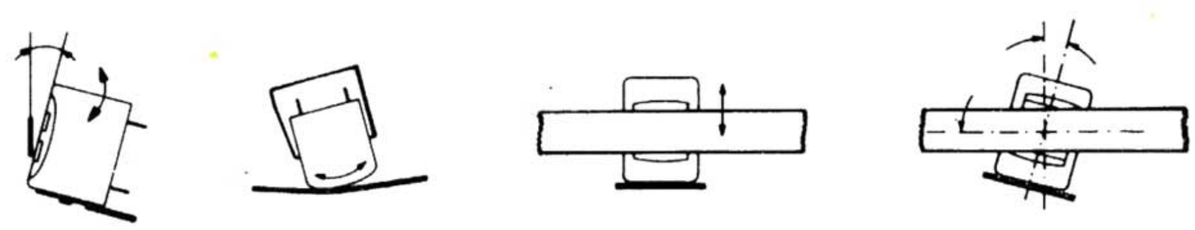

Figure 11

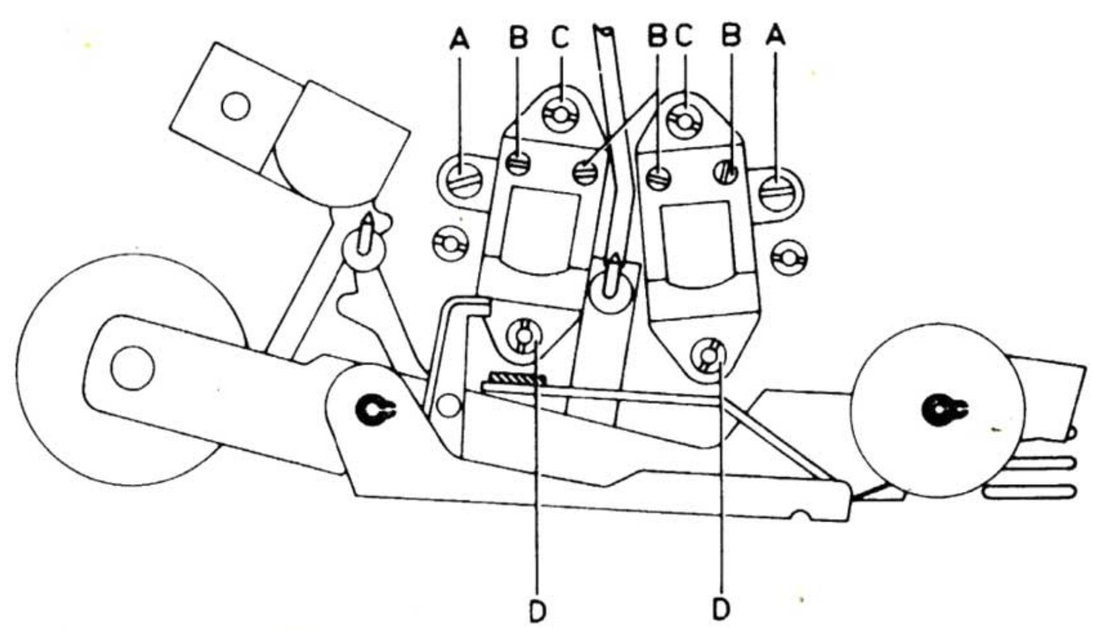

Figure 12

Playback Head, K2/K102 (Figures 11 & 12)

A. Adjustment of the Head Inclination.

Adjust the playback head with nut C in such a way that the front of the head is exactly parallel with the tape or at right angles to the mounting plate.

Check:

1. Place a fully-modulated test tape (on a full 7 in. reel), with a frequency greater than 10K Hz, on the recorder.
2. Connect an AC VTVM to the Right Line Out jack.
3. Play the tape with the Monitor switch at A, the track switch at Stereo, and the speed switch at 19 cm/s (7.5 i.p.s.).

www.hifiengine.com

4. Note the meter reading.

5. Slightly brake the full reel with the hand.

6. Note the meter reading.

7. Connect the AC VTVM to the Left Line Out jack and repeat the above actions.

When braked the output signal should not increase over 2db. If both output signals increase by more than 2db, the tape transport should be checked (see Tape Threading Adjustments). If only the left channel increases more than 2db when the tape is braked, then the head inclines backward, and nut C should be turned in the counter-clockwise direction. If the right channel increases more than 2db then the head inclines forward, and nut C should be turned in the clockwise direction.

B. Head Angle (Tangential Adjustment)

Check carefully to ensure that the head gap is in the center of the contact surface of the tape. If necessary, loosen the screws B and rotate the head.

C. Adjustment of the Head Height (Figure 13)

1. Coarse Adjustment

Place a tape on the unit and adjust nuts C and D, and screw A so that the top of the upper core lies just under the top of the tape. **(Warning: Nuts C and D, and screw A must be turned to exactly the same extent in order to maintain the correct head inclination).**

2. Fine Adjustment

Play a Head Height Test Tape and adjust the head height (nuts C and D, and screw A) according to the instructions packed with the tape. Recheck the adjustment of Head Inclination.

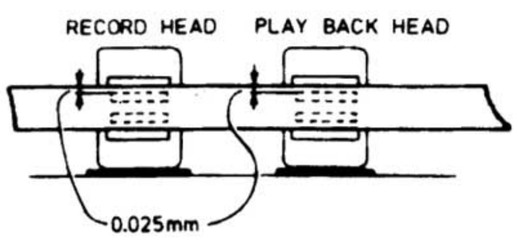

Figure 13

D. Adjustment of Head Azimuth (Figures 10 & 11)

Play a Head Azimuth Test Tape and adjust the head azimuth, screw A, for maximum output at the left and right Line Out jacks. Adjust for the best compromise between the two channels.

Recording Head, K1/K101

To adjust the recording head disconnect it from the P.C. board by unplugging connector F (4 pin black) and connector D (4 pin blue). By plugging connector F into the P.C. board receptacle for connector D, the recording head is made to act as a playback head. The adjustments to the recording head can now be made by following the instructions under Playback Head, K2/K102. After the adjustments have been completed, connectors D and F should be returned to their original receptacles.

An azimuth fine adjustment can now be made in the following way:

1. Apply a 1 KHz signal (approx. 100mV) to the Line In jacks.

2. Connect an AC VTVM between the signal side of the Left Line Out jack and the signal side of the Right Line Out jack, (between pins 3 and 5 of BU4).

3. Record a tape, setting the controls as follows: START and RECORD buttons depressed, Monitoring (A), Track (STEREO), and Speed (19 cm/s).

4. Set the Recording Level control so that the level meters read 100% (Recording Balance should be set so both meter readings are equal).

5. Adjust screw A on the record head assembly to achieve a minimum reading on the AC VTVM, (no more than half a turn should be necessary).

6. Adjust screw A on the playback head assembly to ensure that it is set for the minimum reading on the AC VTVM.

7. Repeat steps 5 and 6 until no further improvement is possible.

NOTE: When replacing the record head, K1/K101, replacement of the felt pressure pad is also recommended.

After the head adjustments have been completed, nuts C and D, and screw A should be secured with lacquer.

Erase Head, K3/K103

Check the surface near the head gap. If it has become grooved, worn, or pitted the erase head should be replaced to prevent damage to the tape. A new erase head needs no adjustment. The tape guides of the erase head are fixed points for the tape transport, therefore, it is advisable to check the tape transport after replacement of the erase head.

BRAKES

This recorder employs both mechanical and electrical braking. Since adjustment of the electrical brake is not necessary only the mechanical brake adjustment is included in this section. For more information on the electrical brake see the circuit description section.

Mechanical Brake (Figure 14)

The force required to move the brake bracket from its rest position to a point where gaps E measure 1.5mm, should be 65 to 75 grams (2.27-2.62 oz.). Adjustments can be made by bending the tag with spring D attached.

With the brake solenoid (RE2) energized (tape running), gaps E should measure 1.3mm to 1.5mm. Adjustments can be made by loosening screws C and moving the braking solenoid.

With the braking solenoid de-energized (tape stopped), bend tag A to obtain a 0.3mm to 0.5mm gap at point B.

www.hifiengine.com

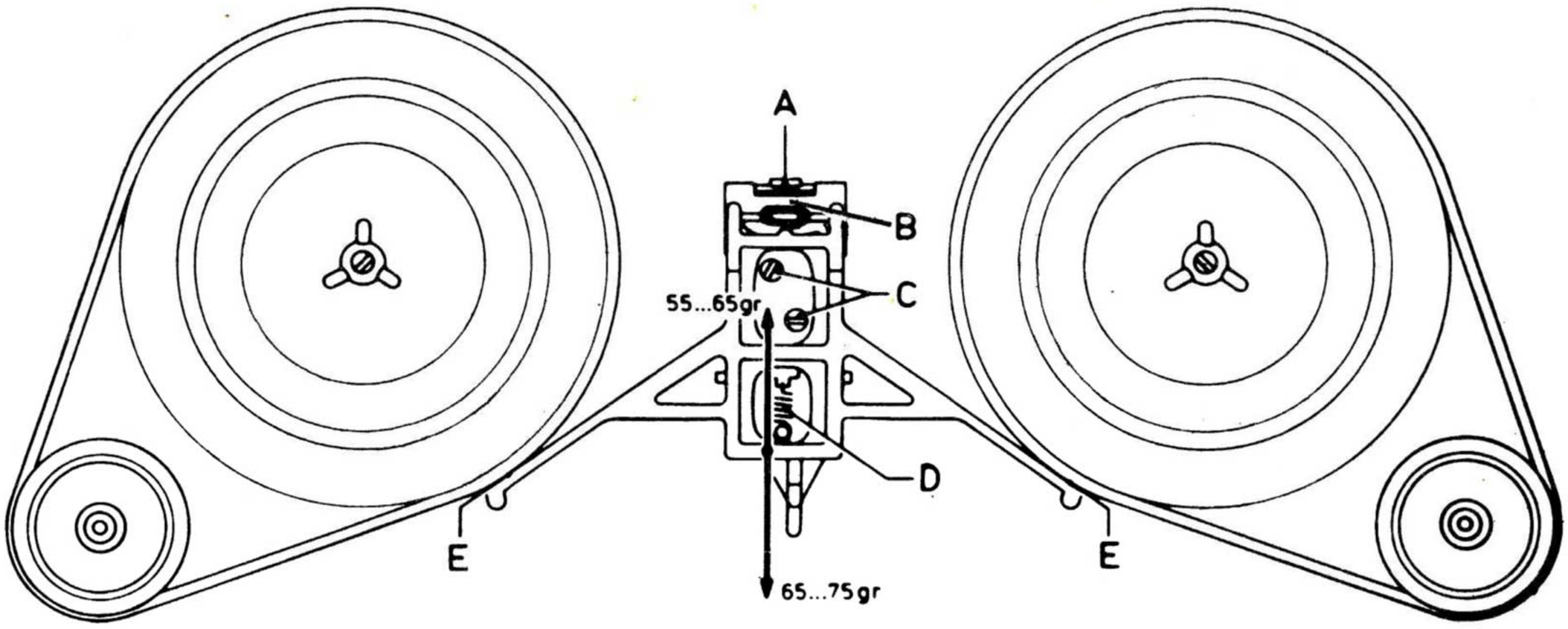

Figure 14

AUTOMATIC SWITCH-OFF SOLENOID (Figure 15)

Any depressed function keys (except Pause) should be released when the switch-off solenoid is energized.

To adjust; loosen screws D, depress keys A (Start) and E (Record). Energize the solenoid (RE3) by short-circuiting the foil sensor contacts, move the solenoid until the keys are released, and tighten screws D. Make sure that tang B is parallel with fork C of the stop bracket.

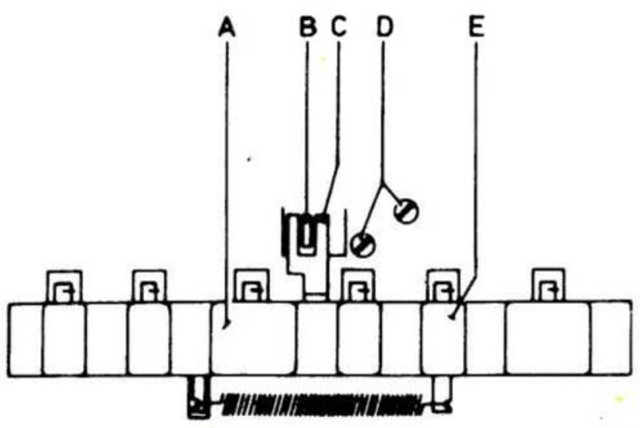

Figure 15

SWITCH SLIDES (Figure 16)

With the control keys in the off-position, the Monitoring and DNL switches in the down position, and the Track and Speed switches in the middle position, the rear of the switch housings should be in area B of the switch slides. Adjustments can be made by bending the linkage rods.

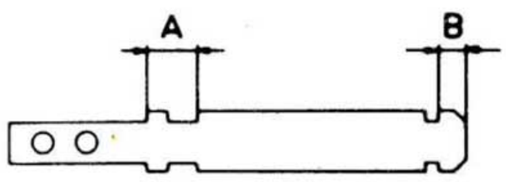

Figure 16

ELECTRICAL MEASUREMENTS AND ADJUSTMENTS

CAUTION: Do not use magnetized screwdriver.

Instruments required:

Multimeter
- AC VTVM
- LF Generator
- Wow and Flutter Meter
- Test Tape, 3150 Hz, 4.75 cm/s (1 7/8 i.p.s.)
  3150 Hz, 9.5 cm/s (3 3/4 i.p.s.)
  3150 Hz 19 cm/s (7 1/2 i.p.s.)

NOTE: The following measurements and adjustments were performed on the left channel. The connection points and adjustment components for the right channel appear in parenthesis. Output voltage measurements should be taken with a 100K ohm resistor in parallel with the meter leads. A 7 inch reel is to be used for both supply and take-up.

MEASUREMENTS

IMPORTANT NOTE: Always clean and demagnetize all heads and tape handling parts prior to using a test tape, to prevent damage to the tape and to produce correct adjustments and accurate measurements.

Measured Current through Motors

During playback the current through the pulling motor should be about 210mA. The current through the motor pulled should be 25mA to 35mA. These measurements should be taken with the tape divided equally between the take-up and supply reels.

During the Wind or Rewind operation the current through the pulling motor should be about 150mA at the beginning and 500mA at the end of the tape. The current through the

www.hifiengine.com

motor pulled should be about 80mA at the beginning and 15mA at the end of the tape.

With the Wind or Rewind key depressed and the reels held stationary, the current through the pulling motor should be about 650mA.

Frequency Response

1. Prepare the tape recorder by setting the controls as follows: RECORD key depressed, Monitoring (B), Track (STEREO), Speed (19 cm/s), Recording Level to maximum, and Recording Balance to the middle position.

2. Apply a 333 Hz signal to the Line In jacks. The amplitude of this signal should be set so that the signal at the Line Out jacks is 250mV ± 0db. If the Level Meters do not indicate 100%, readjust as outlined in Recording/Playback Sensitivity and Meter Adjust section.

3. Adjust the Recording Level control so that the voltage at the Line Out jacks is 25mV (-20db).

4. Using a high quality tape begin recording with the controls reset as follows: START and RECORD keys depressed, Monitoring (A), Track (STEREO), Speed (19 cm/s), Recording Level and Balance must remain as set in the previous step.

5. Check the signal level at the Line Out jacks while setting the generator (input signal) to 35 Hz, 40 Hz, 60 Hz, 333 Hz, 1 KHz, 8.2 KHz, 22 KHz, and 25 KHz. The level measured at each frequency should be within the shaded area of the curve in Figure 17.

   The frequency response at 9.5 cm/s can be measured in the same way, with the highest frequencies becoming 17 KHz and 18 KHz, (see Figure 17).

   When checking the frequency response at 4.75 cm/s the voltage at the Line Out jacks, step 3, should be set at 12.5mV (-26db), and the highest frequencies should be 10 KHz and 11 KHz, (see Figure 17).

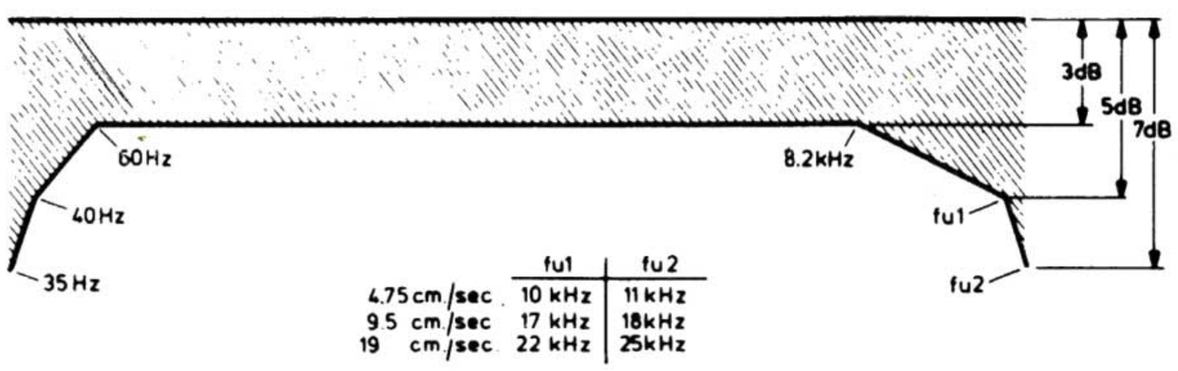

Figure 17

Check for Cross-Talk

A. Cross-talk between channels.

1. Apply a 100mV, 6.3 KHz signal to the left (right) channel Line In jack.

2. Place a Blank (unrecorded) tape on the recorder.

3. Set the controls as follows: RECORD and START keys depressed, Track (Stereo), Speed (19 cm/s), and Record Level to maximum.

4. The signal voltage measured at the right (left) channel Line Out jack should be less than 25mV (-20db) with the Monitoring switch in "A" or "B" position.

B. Cross-talk between tracks

1. Apply a 100mV, 6.3 KHz signal to the left Line In jack.

2. Place a blank (unrecorded) tape on the recorder.

3. Set the controls as follows: RECORD and START keys depressed, Track (Stereo) Speed (19 cm/s) and Record Level to maximum.

4. Make a recording of about 30 seconds.

5. Stop the recorder and, without rewinding the tape, reverse the reels.

6. With the controls set as follows; START key depressed, Track (Stereo), and Speed (19 cm/s); playback the section of tape just recorded. **(NOTE: since the tape was recorded in the opposite direction,the track recorded should not pass in front of either gap on the playback head, therefore, little or no signal should be present at the Line Out jacks).**

7. The signal voltage measured at either Line Out jack should not exceed 0.25mV (-60db).

   If these values are not reached, the tape transport and head height should be checked.

ADJUSTMENTS

IMPORTANT NOTE: Always clean and de-magnetize all heads and tape-handling parts prior to using a test tape, to prevent damage to the tape and to produce correct adjustments and accurate measurements.

Speed Adjust

Using a Wow and Flutter Meter and an appropriate test tape, adjust the speeds using the controls listed below. After the adjustments the wow and flutter measured should not exceed the levels indicated.

Speed	Control	Wow and Flutter
4.75 cm/s (1 7/8 i.p.s.)	R65	0.2%
9.5 cm/s (3 3/4 i.p.s.)	R68	0.2%
19 cm/s (7 1/2 i.p.s.)	R69	0.15%

Rejection of the Bias Oscillator Signal

Without placing a tape on the recorder, set the controls as follows: RECORD, START, and PAUSE keys depressed, Monitoring (A), Track (Stereo), Speed (9.5 cm/s), and Recording Level control to maximum. Adjust L2 (L102) so that the voltage at the Left (Right) Line Out jack is at minimum. **(NOTE: These coils are adjusted by sliding the core in or out of the coil, not by turning the core).**

Recording/Playback Sensitivity & Meter Adjust

1. Apply a 333 Hz signal to the Left (Right) Line In jack.

2. Set the controls as follows: RECORD key depressed, Monitoring (B), Track (Stereo), Recording Level to maximum, and Recording Balance to center position.

3. Set the amplitude of the input signal so that the voltage at the Left (Right) Line Out jack is 250mV.

www.hifiengine.com

4. Adjust R96 (R196) so that the voltage at pin 6 (7) of the Monitor DIN socket (BU4) is 1.4mV ± 0.5db.

5. Adjust R54 (R154) so that the Left (Right) Level Meter indicates 100%.

6. With a high quality tape on the recorder set the controls as follows: START and RECORD keys depressed, Monitoring (A), Track (Stereo), Speed (19), Recording Level at maximum, and Recording Balance at center position.

7. Adjust R40 (R140) so that the Left (Right) Level Meter indicates 100%.

Record Bias Current Adjust (see Figure 18)

The correct setting of the record bias current is a compromise between the frequency response and the distortion. The record bias current is determined by measuring the voltage between pin 6 (7) and pin 2 of the Monitor DIN socket (BU4), while the START and RECORD keys are depressed. **(NOTE: To keep the recorder from turning off automatically when no tape is being used, the PAUSE key should also be depressed).** Adjust R22 (R122) so that the voltage measured is 4mV. The signal frequency should be 100 KHz ± 10% **(NOTE: Adjustment of one channel may affect the other channel).**

For optimum performance the fine adjustment of the record bias current, outlined below, should be performed.

1. Place a high quality tape on the recorder.

2. Check the frequency response (see Frequency Response in the MEASUREMENTS section) adding extra values in the range over 6.3 KHz.

3. The response over 6.3 KHz should more or less correspond with curve 'b' of Figure 18, with the after-tape distortion less than or equal to 3% at 1 KHz (100% modulation).

When the high frequencies are weak (Figure 18, curve 'c') the bias current is too high. When the high frequencies are too strong (Figure 18, curve 'a') and/or distortion is audible, the bias current is too low. Adjust R22 (R122) accordingly. The frequency response and bias current should be the same on both channels.

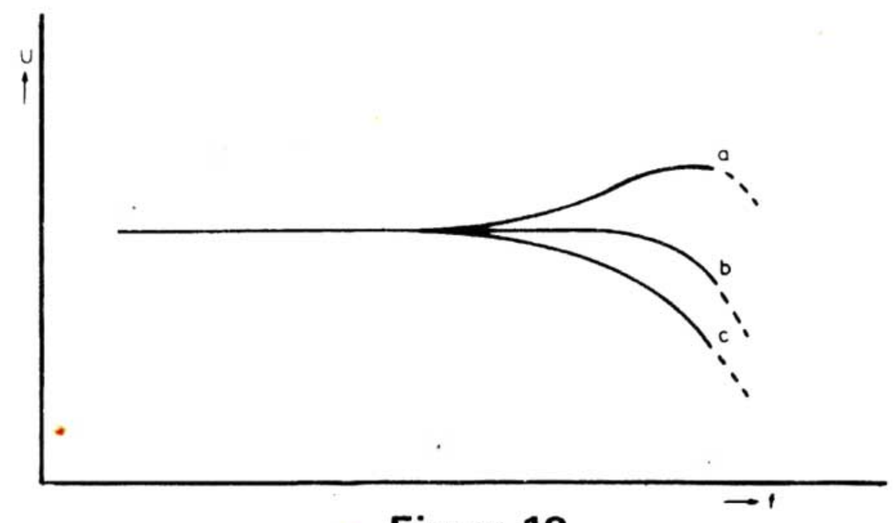

Figure 18

CIRCUIT DESCRIPTION

Drive System (Figure 21)

The circuits described in this section are used solely for supplying power to the motors.

Unit 'On', No Keys Depressed

In this condition the reel motors do not have power applied to them, however, the capstan motor does receive power and turns at a rate determined by the conduction of TS201, which in turn is determined by the setting of the speed select switch. (See Speed Control of the Capstan Motor).

Unit 'On', START Key Depressed

In this condition all three motors receive power. Motor, M3, determines the tape speed. The take-up reel motor, M2, is driven fast enough to keep tension on the tape after it has passed the capstan, thereby, avoiding tape loops. The supply reel motor, M1, is connected so that it attempts to rotate in the opposite direction of tape travel during play and record operations. This motor, controlled by the tape tension circuits, places the correct amount of tension on the tape before it reaches the capstan.

The reel motors, M1 and M2, are supplied power in the following way. Transistor, TS9, acts as a switch between the voltage source, +A, and the motors. When no keys are depressed there is no collector to emitter current in TS391 due to the open ground path in the collector circuit. Therefore, the voltage developed across R308 is not sufficient to bias TS9 'on' and the motors receive no power. Under these conditions the Braking Solenoid, RE2, remains de-energized (full braking).

By depressing the START key, TS391 is allowed to conduct collector to emitter. The increase in current through R308 increases the voltage drop across the resistor. This action drives TS9 into saturation causing it to act as a closed switch. Due to the increased current through the Braking Solenoid, RE2, it becomes energized, thereby, releasing the mechanical brakes. The Pressure Roller Solenoid, RE1, also becomes energized due to the conduction of TS9. This action places the tape in the correct position for head contact while holding the pressure roller against the tape and capstan.

With TS9 acting as a closed switch the source voltage is coupled to the take-up reel motor, M2, via D10 and the network made up of R56, R57, R396, and C44. Capacitor, C44, and resistor, R56, in parallel with R57 and R396 offer a very low resistance to the initial pulse of power present when TS9 turns on. This is necessary to ensure that M2 reaches speed quickly in order to prevent tape loops from forming. After the initial pulse (when C44 has reached full charge) the power to M2 is applied through R57 and R396. During this time the tape reaches full speed almost immediately by means of the capstan and capstan motor, M3, which was turning at full speed before the START key was depressed.

The supply reel motor, M1, receives its power via TS9, the network of R56, R57, R396, and C44, and the circuits on the tape tension board. The voltage supplied to M1 is varied by the tape tension circuits in order to maintain the correct amount of tension on the tape, (see Tape Tension Control).

Unit 'On', REWIND Key Depressed

In this condition power is applied to the capstan motor,

www.hifiengine.com

M3, and the supply reel motor, M2. Since the tape is held away from the capstan, Motor M3 can be disregarded during this operation.

When the REWIND key is depressed, switch SK-2 is actuated causing TS13 to be biased on. The current flowing through RE2 energizes the braking solenoid, thereby, releasing the mechanical brake. With TS13 acting as a closed switch the supply voltage, +A, is applied through D6 to the supply reel motor, M1.

With M1 driven and the tape being wound onto the supply reel, the tape unwinding from the take-up reel causes the take-up reel motir, M2, to turn. As M2 is caused to turn, it generates a voltage which is negative with respect to ground. This negative voltage is coupled through D11 to become the negative supply voltage for the tape tension control circuit containing TS16 and TS17. The negative voltage coupled through D10 is kept from energizing the pressure roller solenoid, RE1, by the blocking action of D2.

Unit 'On', WIND Key Depressed

In this condition power is applied to the capstan motor, M3, and the take-up reel motor, M2. Since the tape is held away from the capstan, motor M3 can be disregarded during this operation.

When the WIND key is depressed, switch SK3 is actuated causing TS14 to be biased on. The current flowing through RE2 energizes the braking solenoid, thereby, releasing the mechanical brake. With TS14 acting as a closed switch the supply voltage, +A, is applied through D9 to the take-up reel motor, M2.

With M2 driven and the tape being wound onto the take-up reel, the tape unwinding from the supply reel causes the supply reel motor, M1, to turn. As M1 is caused to turn, it generates a voltage which is negative with respect to ground. This negative voltage is coupled through D12 to become the negative supply voltage for the tape tension control circuit containing TS16 and TS17, (see Tape Tension Control for more information on this circuit).

Tape Tension Control (Figure 21)

There are two tape tension control circuits used in the unit. One circuit maintains the correct tape tension whenever the START key is depressed. The other circuit functions only during the WIND and REWIND operations.

Unit 'On', START Key Depressed

In this condition the tape tension is controlled by the circuit containing TS2, TS3, and sensor switch SK13. With the START key depressed the take-up motor, M2, is supplied power via D10, R57, R396, and TS9. The tape tension is determined by the amount of supply voltage applied to the supply reel motor, M1. If the tape tension becomes too low, section a-b of SK13 becomes closed. Due to this action a positive potential is applied to the base of TS3 via SK13a-b, R214, and R208. This potential drives TS3 and TS2 into conduction causing TS2 to appear as a closed switch. Supply voltage is now applied to M1 through TS2, D4, R57, R396, and TS9. The motor attempts to turn against the rotation caused by the tape travel, and therefore increases the drag on the tape. This in turn increases the tape tension.

If the tape tension becomes too high, section b-c of SK13 closes while section a-b opens. The positive potential is removed from the base of TS3 which is now connected to ground via R215 and SK13b-c. Under these conditions TS3 and TS2 are cut-off keeping the supply voltage from reaching the supply reel motor, M1. With no supply voltage M1 will cause very little drag on the tape, therefore, the tape tension will decrease.

The charging action of C3 and C2 in the base circuit of TS3 keeps the base voltage from varying too quickly as the sections of SK13 open and close.

When the START key is depressed, the initial power pulse present at the top of the pressure roller solenoid, RE1, is coupled to the base of TS3 via C805. This action ensures that the tape tension circuit will be operative at the moment the tape begins to move.

When the recorder is switched from WIND to START, the tape tension circuits must operate at the moment the START function is initiated. During the WIND operation the supply reel disc motor, M1, produces a negative voltage which charges capacitors C2 and C3 via the base/emitter junction of TS3. When the START key is depressed the brakes are activated causing TS15 to turn on, (see Electrical Brake). The negative voltage on C2 and C3 is discharged via D29 and the TS15 circuitry. The capacitors are then charged slightly positive by the same circuit. This action along with the initial pulse coupled to the base of TS3 via C805, ensures that the tape tension circuit is operating when the START function begins.

For more information on the circuit which delays the START function when the recorder is switched from WIND or REWIND to START, see Delay Circuit.

Unit 'On', WIND or REWIND Key Depressed

In this condition the tape tension is controlled by the circuit containing TS16 and TS17. This circuit acts as a varying resistance across the motor which is turned by the tape. When the resistance across the motor is low it provides maximum drag on the tape. When the resistance across the motor is high it provides minimum drag on the tape. This action ensures relatively constant tape speed during WIND and REWIND operations.

When the reel to be wound is at the beginning of the tape, the pulling motor runs at maximum speed, and the current through the motor and R59 is at minimum. The negative voltage generated by the pulled motor is also at minimum. The voltage divider of R60, R307, and R302 establishes the bias on TS16 and TS17. The negative voltage generated by the pulled motor and the voltage developed across R59 cause the bias and conduction of these transistors to change. With the full reel on the motor being pulled by the tape the generated negative voltage is low. Due to voltage divider action, TS16 conducts slightly or not at all. Meanwhile, TS17 is biased into heavy conduction causing it to appear as a low resistance across the motor being pulled by the tape. This action causes the pulled motor to provide maximum drag on the tape.

As the tape is transferred from the motor being pulled to the pulling motor, the speed of the motor being pulled increases. This causes the generated negative voltage to increase which in turn causes the bias on TS16 and TS17 to change. As the generated voltage becomes more negative the

www.hifiengine.com

conduction of TS17 decreases and the conduction of TS16 increases. Therefore, the apparent resistance across the motor being pulled increases causing the amount of drag felt by the tape to decrease.

Any changes in the TS16 emitter voltage caused by fluctuations in the +A supply will be cancelled by an equal change in the TS16 base voltage, via R60. This action ensures a more constant rewind time. Any interference pulses generated by the motor being pulled are shunted to ground via C58.

Electrical Brake (Figure 21)

Most of the braking is accomplished by means of the electrical brake circuits which apply drag to the tape via the reel motors. The mechanical brake is an auxiliary brake used in conjunction with the electrical brake. The mechanical brake also places some drag on the reel discs while loading a tape, thus preventing tape loops and unwinding.

The following procedure occurs whenever the STOP key is depressed while the recorder is operating in any function which causes tape travel; WIND, REWIND, PLAY, or RECORD. As the STOP key is depressed all other keys are released mechanically. This action removes the supply voltage from the brake solenoid. As the voltage across the solenoid decreases, TS15 becomes biased on, via R306, D20, and RE2. This action occurs before the solenoid becomes completely de-energized, thus the mechanical brakes are not yet applied. With TS15 conducting, a positive voltage is developed at the base of TS11. Since the negative voltage generated by the pulled motor is present at the emitter of TS11, this transistor also turns on. With TS11 now acting as a closed switch, the +A supply voltage is applied to the motors (M1 and M2) via R61, TS11, D11 and D12. This voltage has a greater effect on the pulled motor causing the tape to be braked. As long as the pulled motor generates a voltage sufficiently negative to keep TS11 conducting, the current through R61 will cause a voltage drop across that resistor. Whenever the voltage at the base of TS19, via R304, is about 4 volts or more below the +A supply voltage, the transistor will be biased on. A supply voltage less than +A is now applied to the braking solenoid, RE2, via D22 and TS19. This voltage serves two purposes; it keeps the braking solenoid from becoming de-energized, and it keeps TS15 biased on, which in turn keeps TS11 biased on.

As the braking effect slows the motors, the negative voltage generated by the pulled motor is reduced. When the generated negative voltage drops to a level that will no longer bias TS11 on, the transistor switches off thus removing the current through R61. The base of TS19 now rises towards the supply voltage, +A, causing this transistor to turn off also. With TS19 acting as an open switch the braking solenoid, RE2, no longer receives a supply voltage, therefore, it becomes de-energized and the mechanical brakes are applied.

The entire braking operation happens so quickly that the delay between the time that the STOP key is depressed and the time that the mechanical brakes are applied can only be witnessed during the WIND and REWIND functions.

Delay Circuit

The delay circuit prevents tape breakage and tape loops from occurring when the recorder is switched from the WIND or REWIND position to the START position.

During the WIND and REWIND operations C391 becomes charged (via R394, D391, and R308) with its positive plate connected to the emitter of TS392. When the START key is depressed the WIND or REWIND key is mechanically released, placing the cathode of D391 at the +A supply potential, via SK2 and SK3. With D391 reverse biased C391 will discharge through R392 and R393. The resulting voltage drop across R393 biases TS392 on. With TS392 conducting, TS391 is biased off, so the START operation will not begin. For the START operation to begin TS391 must conduct in order to drive TS9 into conduction, (see Drive System for more information).

When C391 becomes sufficiently discharged, the voltage drop across R393 will be reduced causing TS392 to turn off. The base voltage of TS391 will now drop towards ground causing this transistor to turn on heavily. The resulting voltage drop across R308 will drive TS9 into conduction and the START operation will begin.

Automatic Stop

The automatic stop circuit is activated when the end of the tape is reached or when the tape is broken. In either case the unit is stopped by energizing the stop solenoid, RE3, which mechanically releases all function keys except PAUSE.

Automatic Stop Using Sensing Foil

At the end of the tape the foil momentarily shorts across the contacts of the foil sensor. This places a ground potential at the junction of R78 and D3, forming a voltage divider consisting of R77, R79, and R78. As current first begins to flow C53, connected across R78, acts as a short. This effectively changes the divider network to R77 and R79. The values of R77, R79, R78 and C53 are chosen so that TS6 is momentarily turned on only while C53 charges (acts as a short). As soon as C53 is fully charged, the current begins flowing through R78 changing the divider action and turning off TS6. Since the stop solenoid, RE3, is connected in the collector circuit of TS6, it will become energized whenever TS6 is conducting. Therefore, as the foil shorts across the sensor contacts, RE3 is momentarily energized and all the function keys are mechanically released.

Automatic Stop Without Sensing Foil (Tape Breakage)

The operation of the automatic stop circuit is the same for tape breakage as it is for tapes without sensing foil. The circuit consisting of TS1, TS4, and TS5 on the tape tension board is a voltage comparator. During the WIND, REWIND, and START operations the positive supply voltage of the driving motor is compared with the negative voltage generated by the motor pulled by the tape. The positive voltage is applied to the base of TS4 via R1 or R2. The negative voltage developed by the pulled motor is applied through D1 (or D2) through R3 to the emitter of TS1. When TS1 switches on, the collector goes to near ground potential and TS4 is held cut-off. When the end of the tape is reached, or the tape is broken, the negative voltage generated by the pulled motor will no longer be present at the emitter of TS1. As a result, the base of TS4 becomes positive with respect to the emitter and the transistor turns on. This causes TS5 to turn on also, effectively placing a short across the contacts of the foil sensor, thereby, stopping the unit, (see Automatic Stop Using Sensing Foil).

www.hifiengine.com

Speed Control of the Capstan Motor

The speed of the capstan motor, M3, is electronically controlled by the circuit employing G3, TS204, TS203, TS202 and TS201. Generator G3 is mechanically coupled to the capstan motor, M3. Therefore, the frequency of the AC voltage generated by G3 is determined by the speed of the motor. This generated AC voltage is applied to the cathode of D207 which couples only the negative half cycles to the base of TS204. The inverted and shaped signal appears at the collector of TS204 where it is differentiated by C203. The signal is now rectified by D204 and D205, and then filtered by C204. The resultant DC voltage is applied to the base of TS203. Also applied to the base of TS203 is a DC voltage determined by one of the speed adjustment controls, R65, R68, or R69. The control used depends on the position of the Speed Selector Switch, SK-10. The combined DC voltage at the base of TS203 determines how heavily the transistor will conduct. The conduction of TS203 determines the conduction of TS202, which in turn, determines the conduction of TS201. Since the motor is in the collector circuit of TS201, its speed is determined by that transistor's conduction.

If the motor speed slows down, the frequency of the AC voltage generated by G3 will be lower. With fewer pulses being rectified, the resultant DC voltage applied to the base of TS203 will be lower. As its base voltage decreases TS203 will conduct harder as will TS202 and TS201. Due to this action TS201 will couple more of the supply voltage to the motor causing it to speed up. If the motor speed increases, the reverse action takes place, reducing the supply voltage to the motor and causing it to slow down.

Diode D206 protects TS203 and C204 by limiting the positive potential at the base of TS203. Capacitor C206 bypasses any remaining AC ripple around the motor. A filter formed by C207 and R209 is used to increase the stability of the control circuit.

Power Supply (Figure 20)

The power supply of the N4504 provides five regulated sources and one unregulated source. When the Power switch, SK0, is placed in the 'on' position the 120 VAC line voltage is applied across the primary of the power transformer, T1. The AC voltage developed across the secondary of T1 is applied to the meter lamp circuit and the bridge rectifier, D14. The position of the Track Select switch, SK9, determines which meter lamp, LA701 or LA751, will be lit. In the 'Stereo' position both meter lamps are lit.

The DC output of the bridge rectifier is filtered by C701 and becomes source 'A'. This voltage lights the 'Power' LED, and the DNL LED, when the DNL switch is in the 'on' position. The source 'A' voltage is also the input voltage to the regulator circuit, consisting of TS7 and TS8. Transistor TS8 acts as a variable resistor in series with the source voltage. By varying the conduction of TS8 via a voltage sensor, TS7, it is possible to maintain the regulator output voltage at a constant level. If the voltage at the collector of TS8 would attempt to drop, an identical change in voltage would appear at the emitter of TS7. This is due to the action of zener diode, D15. Since this diode should always drop 8.2V, a change in its cathode voltage will be reflected by an equal change in its anode voltage. The decrease in voltage at the collector of TS8 also causes a decrease in voltage at the base of TS7, due to the divider action of R74 and R75. Since the drop in voltage is divided between R74 and R75, the change at the base of TS7 will not be as great as the change at its emitter. Under these conditions the bias on TS7 will increase, causing it to conduct harder, lowering its collector voltage. Since the collector of TS7 is connected directly to the base of TS8 the bias on TS8 will increase, causing it to conduct harder and reducing its effective resistance. As the conduction of TS8 increases less voltage is dropped across it, and the collector voltage increases toward the emitter voltage. This action counteracts the initial drop in source voltage. If the collector voltage of TS8 attempts to increase, the conditions stated above are reversed. The bias on TS7 and TS8 is reduced and the conduction of TS8 is decreased. This action causes more of the input voltage to be dropped across TS8 which in turn reduces the voltage available to sources B through F.

Source B is derived directly from the collector of TS8 and is filtered by C41. Sources C through F are formed by series resistors R76, R64, R207, and R18. Each source is filtered by an electrolytic capacitor, and source F incorporates a zener diode, D17, for additional regulation.

Audio (Figure 22)

Since the left and right channels of the audio section are nearly identical only the left channel will be discussed.

Playback

The signal induced into playback head, K2, by the tape, is coupled to the base of TS2 via C14 and R322. The signal is amplified by TS2, coupled through C15, and amplified further by TS5. The signal at the collector of TS5 is applied to the top of the playback level calibration control (R40) via C16 and R81. A portion of the signal at the junction of C16 and R81 is coupled back to the emitter of TS2 for equalization purposes. The equalization network to be used is determined by the setting of the tape Speed switch, SK10. Therefore the correct equalization is supplied regardless of tape speed.

From the wiper of R40 the signal is coupled to pin 9 of the DNL board. The DNL (Dynamic Noise Limiter) board amplifies the signal and senses the signal level. If the DNL switch is 'on' the high frequencies (noise and tape hiss) of low level signals will be attenuated. During high level signals all frequencies are amplified equally. This improves the apparent signal-to-noise ratio at low level sound, but does not affect the audio on the higher level sound. When the DNL switch is 'off' all frequencies of the input signal are amplified equally regardless of the signal level.

The signal at the output of the DNL board (pin 7) is coupled to the top of the Headphone Volume control, R701, via SK8 and SK6 whenever the Track Select switch is in the 'Stereo' position. By placing the Track Select switch in either the '1-4' or '2-3' position it is possible to apply the output signal from the DNL board of either channel to the Headphone Volume controls of both channels. In this condition the information recorded on one track of the tape is played back by both channels.

The signal at the wiper of R701 is applied to the top of the Headphone Balance control, R702. The signal at the wiper of the balance control is coupled through C32 to the input, pin 4, of a differential amplifier in IC2. The gain and frequency response of the differential amplifier are determined by the feedback from pin 13 to pin 5 of IC2, and the RC network at pin 12 of IC2. The output of the differential amplifier at pin 13 is coupled through C35 and R92 to the Headphone jack, BU2.

www.hifiengine.com

A portion of the output signal of the DNL board is coupled to pin 3 of the Line In/Out DIN connector, BU3, via R43 and SK6. This same signal is also coupled to pin 3 of the Monitor DIN connector and the Line Out jack through R84. Another portion of the same signal (DNL output) is applied through C30 to the base of TS12, an emitter follower. The output at the emitter of TS12 is coupled through C42 to the junction of D24 and D28. The signal is then rectified by D28, filtered by C36, and applied to the top of the left channel indicator meter, via R88 and R54. A section of SK9 is used to disable the meter when the Track Select switch is in the '3-2' position.

Recording

During recording, the circuits described under Playback operate as stated in that section as long as the Tape Monitor switch is in the 'A' (After Tape) position. Due to this action the signal present at the Headphone jack and represented on the level meter is actually the recorded signal as it is reproduced by the playback circuitry. When the Tape Monitor switch, SK7, is in the 'B' (Before Tape) position, the signal present at the Headphone jack and represented on the level meter is the signal as it appears before being recorded on the tape.

There are four methods to connect a signal to the record input circuitry of this unit. A microphone with a signal level of 0.2 mV/2K ohm may be connected to the Microphone jack, BU1. The DIN connector, BU3, will accept a signal level of 2mV/20K ohm at pin 1, or 100mV/1M ohm at pin 3. The other Line In jack, BU21, can be used for connecting equipment with phono style plugs and a signal level of 100mV/1M ohm. Regardless of the method used the signal is coupled through R321 and C1 to the base of TS1. The amplified signal at the collector of TS1 is coupled through C3 to the top of the left Record Level control, R703. A portion of this signal is coupled through R80 back to the base circuit of TS1, thus increasing the stability and frequency response of the circuit. The signal at the wiper of R703 is applied to the top of the Record Balance control, R704. The signal at the wiper of R704 is coupled through R7 and C4 to the input, pin 4, of a differential amp in IC1. When the Track Select switch, SK9, is in the '1-4' or '3-2' position the signals present at the wipers of the left and right channel Balance controls (R704 and R754) are combined to form one signal. In this way both left and right channel inputs can be used even when recording on only one track. The signal from the output of the differential amplifier at pin 13 is coupled through R95 and C7 to the input of another differential amplifier in IC2. The frequency response and gain of the first differential amp are determined by the feedback from pin 13 to pin 5 of IC1, and the RC network at pin 12 of IC1. When the Monitoring switch, SK7, is in the 'B' position a portion of the output signal from pin 13 of IC1 is coupled through C23, SK7, and SK6 to the headphone amplifier circuit and the level indicator meter circuit. In this way it is possible to monitor the signal being recorded as it appears before being placed on the tape. The DC level at the input, pin 7, of the second differential amplifier is determined by the setting of the record level calibration control, R96. By varying the DC level at the input, the amplification of the stage is determined. The output of the second differential amplifier is developed at pin 11 of IC2. The gain and frequency response of this amp are determined by the RC network at pin 10 and the feedback from pin 11 to pin 8. The feedback network used by this amp is determined by the setting of the tape Speed switch, SK10. This action ensures that the correct playback equalization will take place regardless of the tape speed. The output of the differential amp is coupled to the record head via C10, SK9, SK6, R15, and R16. The Track Select switch, SK9, is connected so that no audio will reach the record head when the switch is in the '3-2' position. The Record switch, SK6, is connected so that no audio will reach the record head when the Record key is not depressed.

The main difference between the left channel and right channel circuitry is in the operation of the Track Select switch, SK8 and SK9. With the Track Select switch in the '1-4' position the signals from both the left and right input jacks are applied to the left channel meter and the record head connected to the left channel circuitry. Under these same conditions the right channel meter is disabled and the record head connected to the right channel circuitry receives no signal. With the Track Select switch in the '3-2' position the conditions stated above are reversed.

While recording or playing back a tape with the Track Select switch in either the '3-2' or the '1-4' position, the combined signals from the left and right input jacks are applied to both Line Out jacks (BU20, BU120) and the left and right channel connections of the Headphone jack (BU2) and the Monitor DIN connector (BU4). Whenever the Track Select switch is in the 'Stereo' position the left and right channels operate independently in order to record and playback stereo information correctly.

Erase/Record Bias Oscillator

The bias oscillator, consisting of TS4 and TS10, generates the bias signal which is combined with the audio signal while recording. This circuit oscillates at approximately 100KHz. The output of the oscillator, developed at the emitters of TS4 and TS10, is coupled to the Track Select switch, SK8, via C27 and C26. A portion of the output signal is coupled back through R89 to the oscillator input in order to sustain oscillations. The position of the Track Select switch, SK8, determines whether the bias signal is applied to the record and erase head connections for the left channel, the right channel, or both channels.

www.hifiengine.com

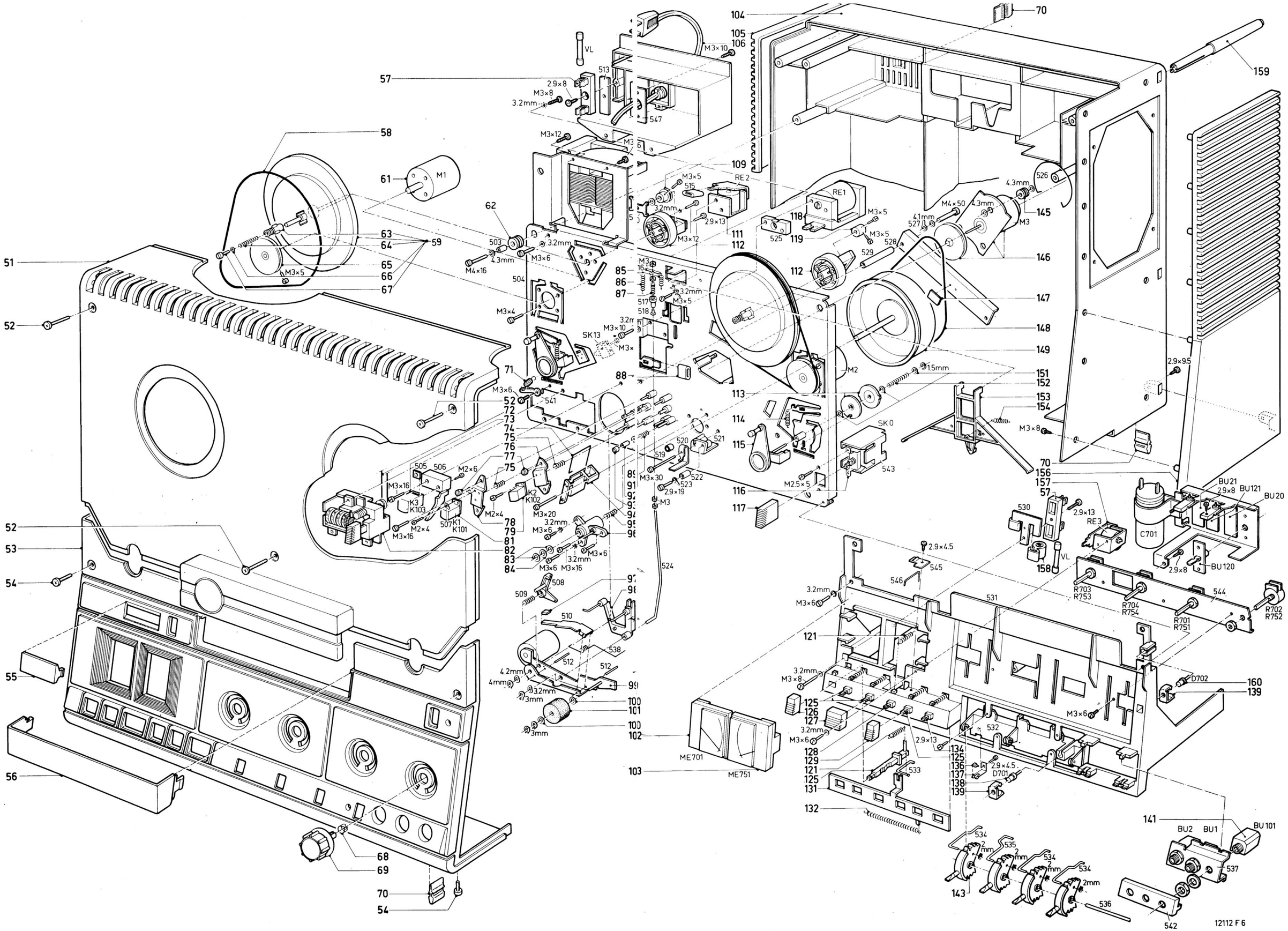

Figure 19 N4504 EXPLODED VIEW

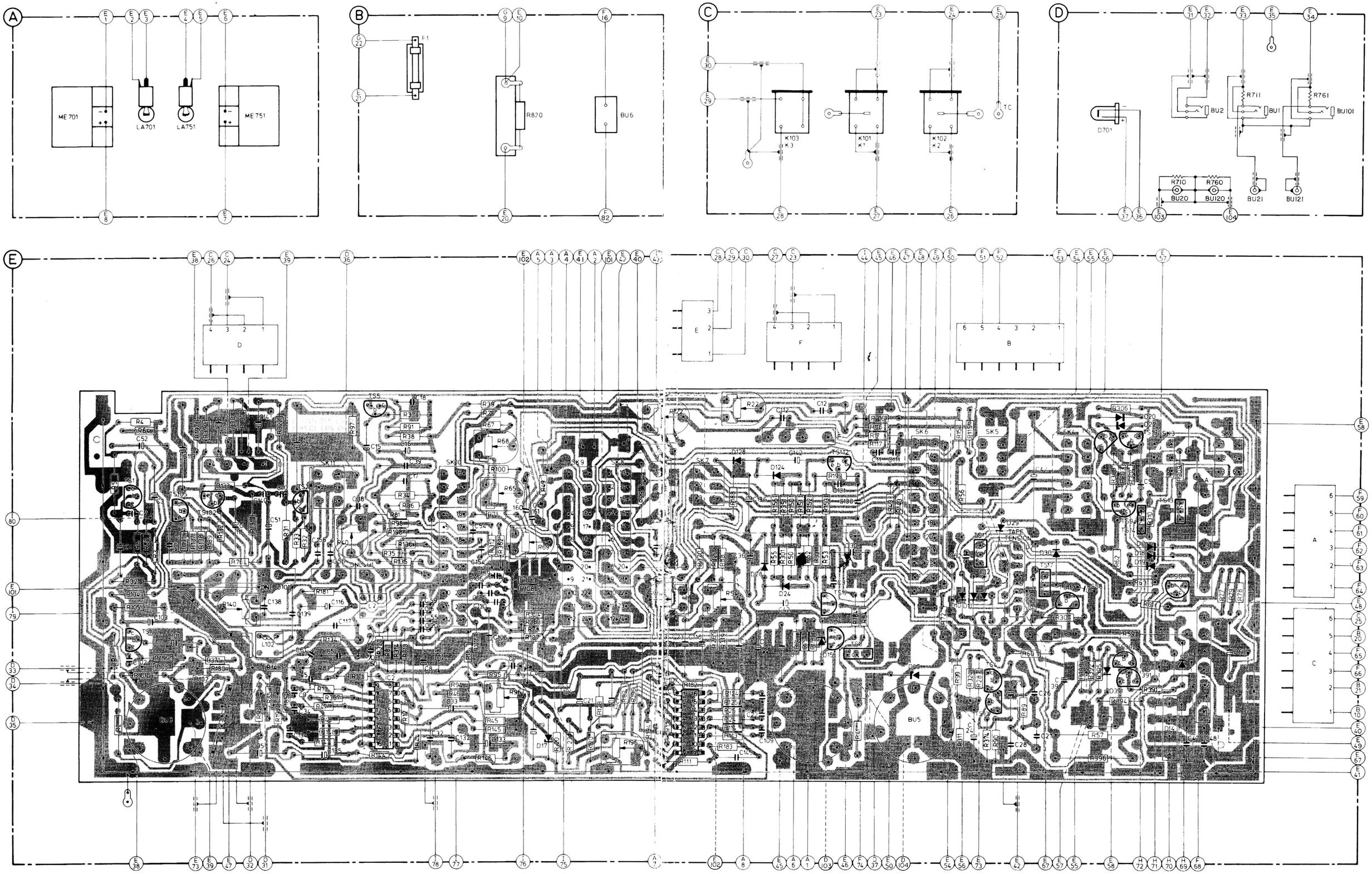

Figure 20 N4504 WIRING DIAGRAM (TOP VIEW OF MAIN BOARD)

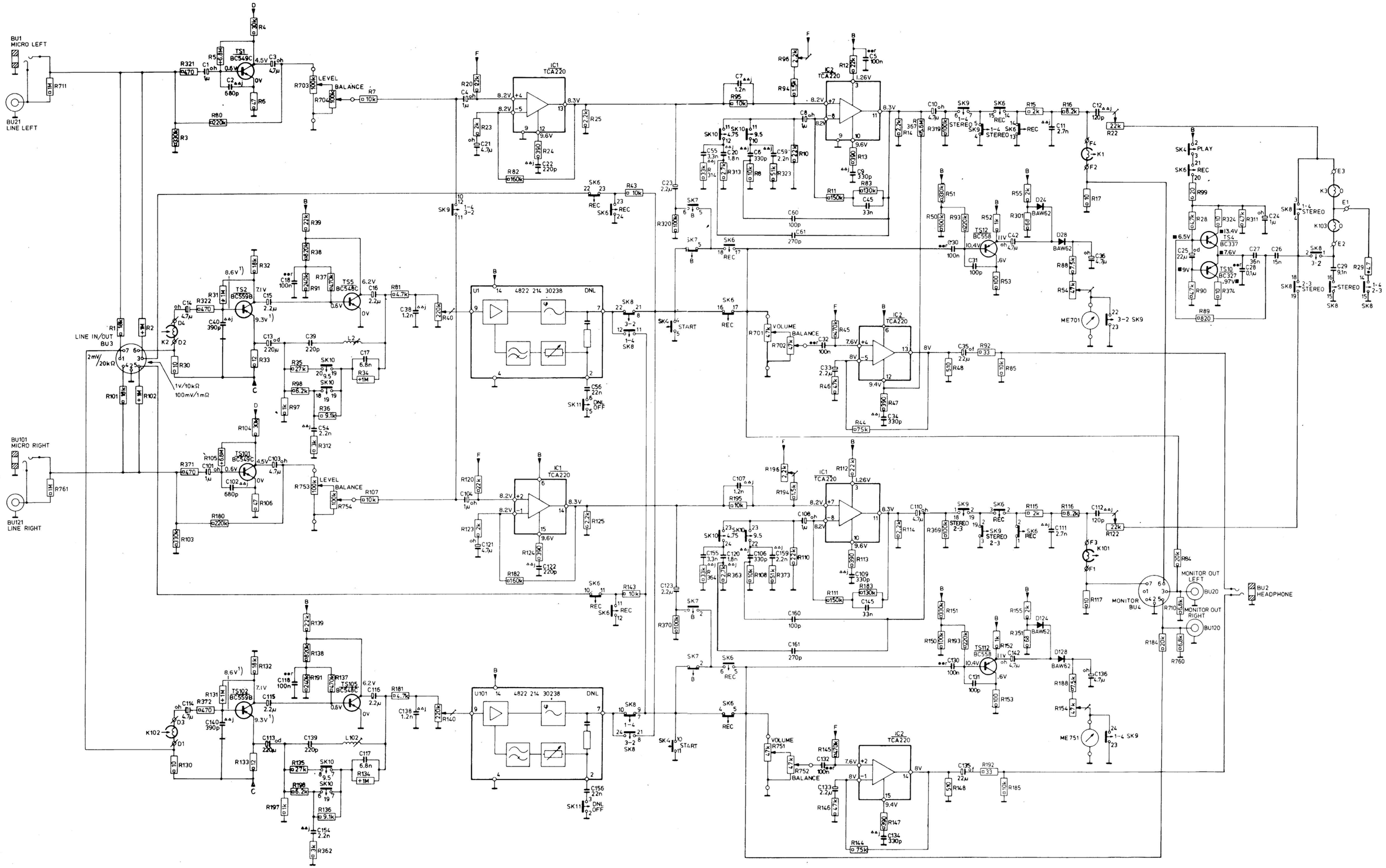

Figure 21 N4504 AUDIO SCHEMATIC DIAGRAM

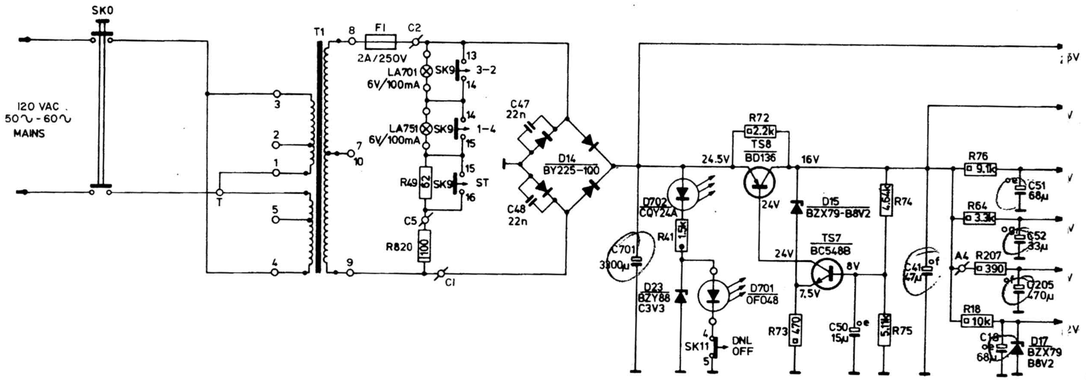

Figure 22 N4504 POWER SUPPLY SCHEMATIC DIAGRAM

1 nf = .001 uf
10 nf = .01 uf
100 nf = .1 uf

NOTE:

UNLESS OTHERWISE SPECIFIED:

1. ALL VOLTAGES TAKEN IN THE STOP CONDITION, EXCEPT THOSE MARKED WHICH WERE TAKEN WITH THE START AND RECORD KEYS DEPRESSED.
2. ALL VOLTAGES ARE POSITIVE WITH RESPECT TO GROUND.

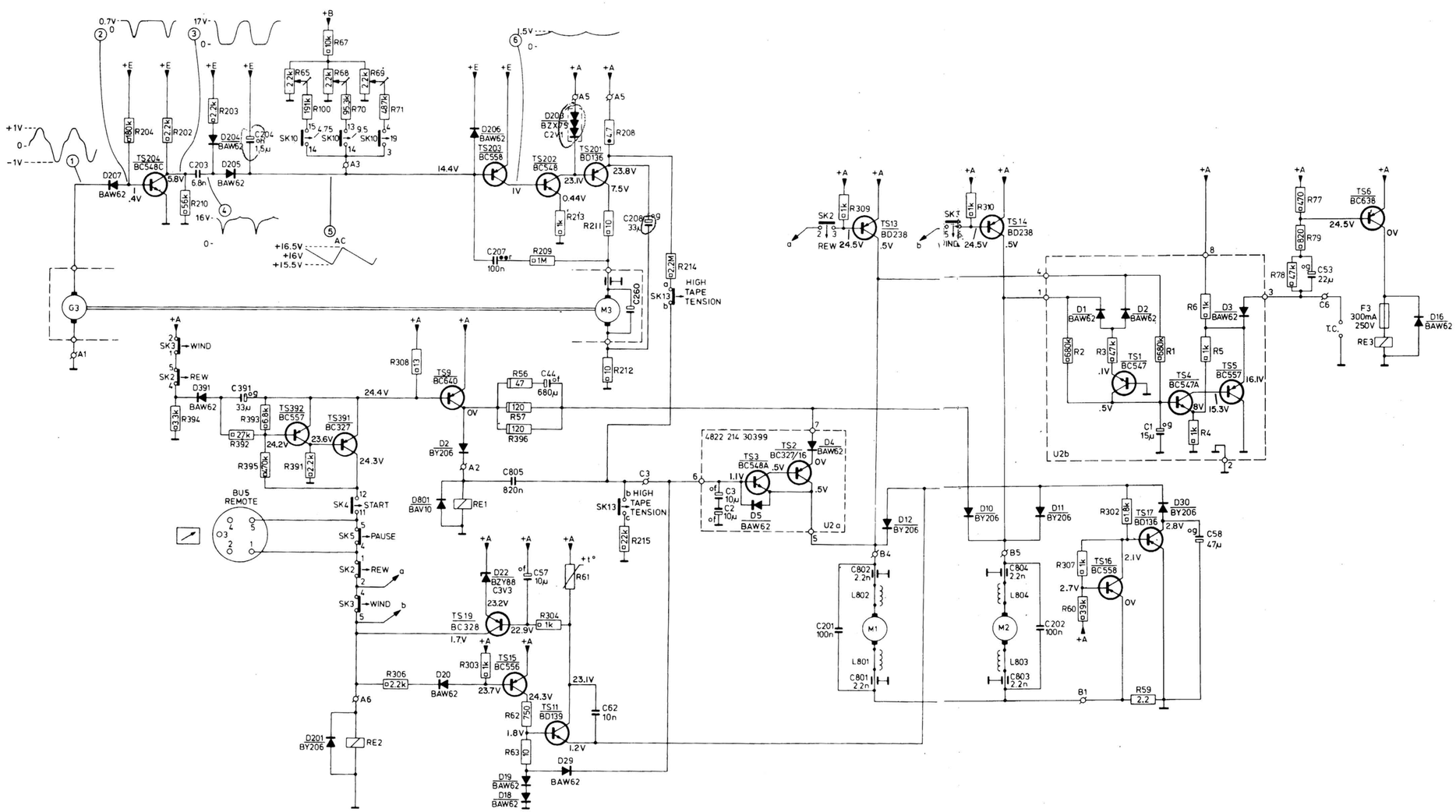

Figure 23 N4504 MOTOR CONTROL SCHEMATIC DIAGRAM

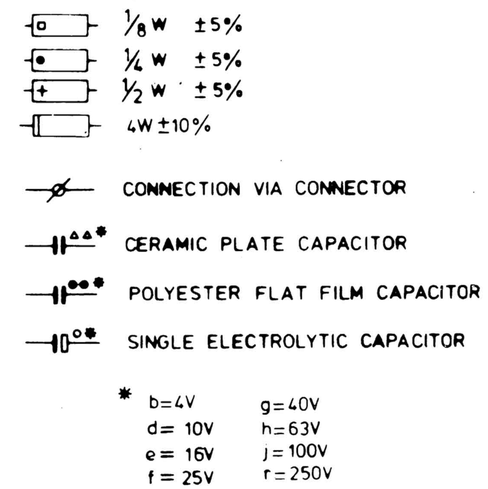

POSITION "STOP"

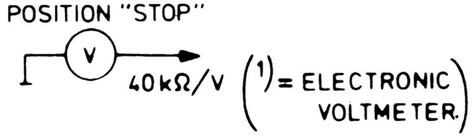

SOURCE REF.	SOURCE VOLTAGE
A	24.5V
B	16V
C	11V
D	14V
E	15V
F	8.2V

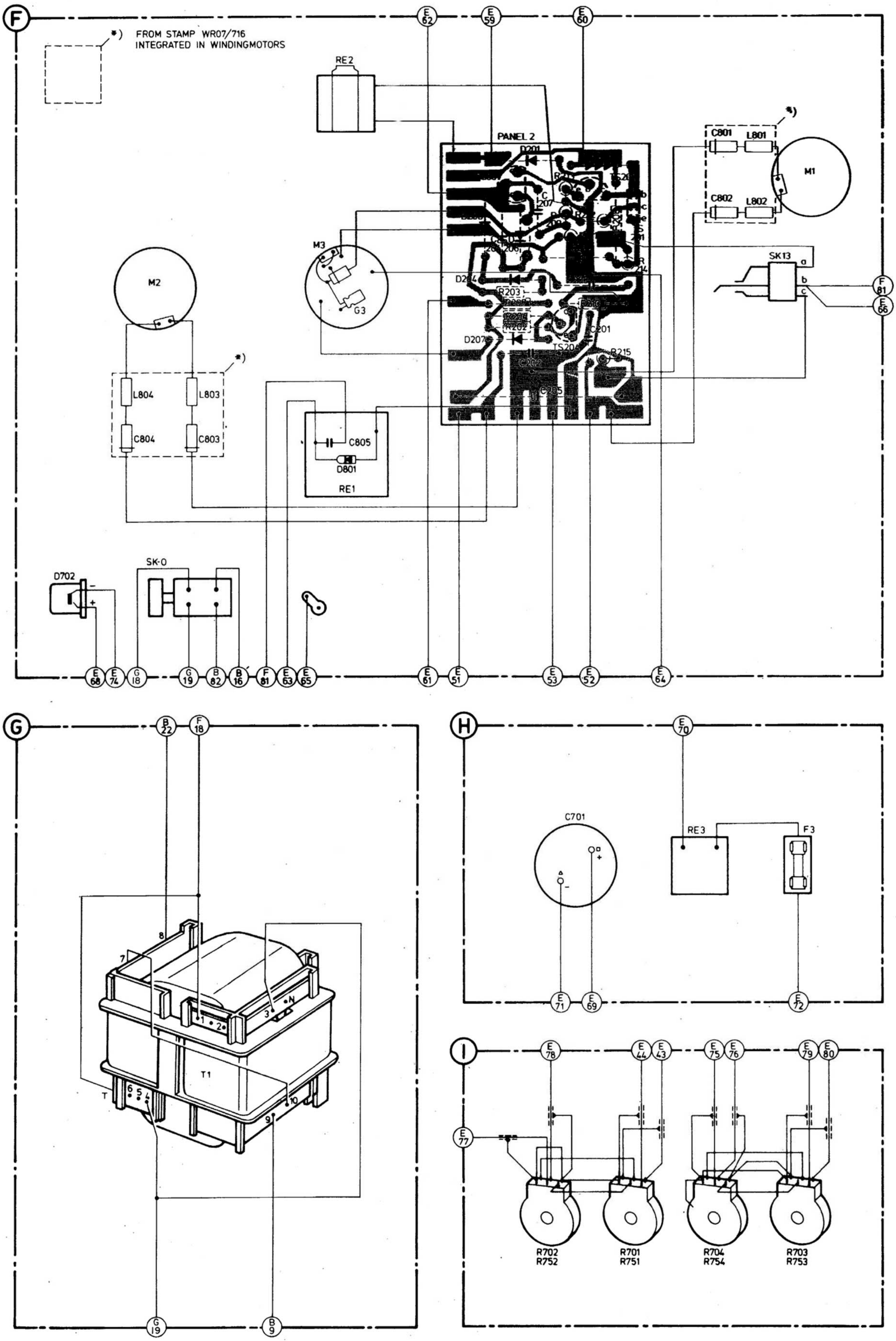

Figure 24 N4504 WIRING DIAGRAM (BOTTOM VIEW OF TACHO BOARD)

www.hifiengine.com

Indication	For the connection of	Sensitivity	Impedance	Socket type	Connections	Location
LINE IN/OUT	second recorder or another set provided with a 5-p 180 DIN input/output socket input pins : 1 and 4 output pins: 3 and 5	 2mV 250mV	 20K Ohm 5K Ohm	7p,270°,DIN	1 - left 4 - right 2 - ⏚ 5 - right 3 - left 6 - T.P. 7 - T.P.	rear
PHONO BU3	record player input pins: 3 and 5	 100mV	 1 Meg.			
MONITOR BU4	amplifier recorder	250mV	5K Ohm	7p,270°,DIN	1 - 4 - 2 - ⏚ 5 - right 3 - left 6 - T.P. 7 - T.P.	rear
REMOTE BU5	remote control unit N6718			5p,240°,DIN	1 - SK5 point 5 2 - 3 - 4 - 5 - SK5 point 6	rear

T.P. - Test Point

Figure 25 DIN CONNECTOR CHART

MAINTENANCE (REFER TO FIGURE 26)

Cleaning

After every 50 hours of operation the tape transport mechanism should be cleaned as follows: Disconnect the AC cord and remove the head cover assembly. Using alcohol and a soft lintless cloth or cotton swab, clean all surfaces which come into contact with the tape, (tension arm guides, tape guides, heads, capstan, and pressure roller). Never use other cleaning agents and do not touch the heads with sharp or metal objects. Allow all parts to dry before replacing the head cover and reconnecting the AC cord.

Head Demagnetization

Use a head demagnetizer after servicing the unit, after any head adjustment, or after a DC resistance check of any head. Avoid using magnetized tools near the head.

Lubrication

Carefully apply the following lubricants where indicated.

1. Lubricate the thrust bearing (147) of the flywheel with Shell Alvania 2, part number 4H38910001.
2. Lubricate the bearings of the reel discs and the tape tension arms with silicone liquid, part number 4H390-20023.
3. Lubricate the pressure roller bearing with Shell Clavus 17, part number 4H39010048.
4. Lubricate the flywheel bearing (96) with Mobil Oil DTE, part number 4H39010065.

NOTE: After lubricating, carefully clean all surfaces which come into contact with the tape.

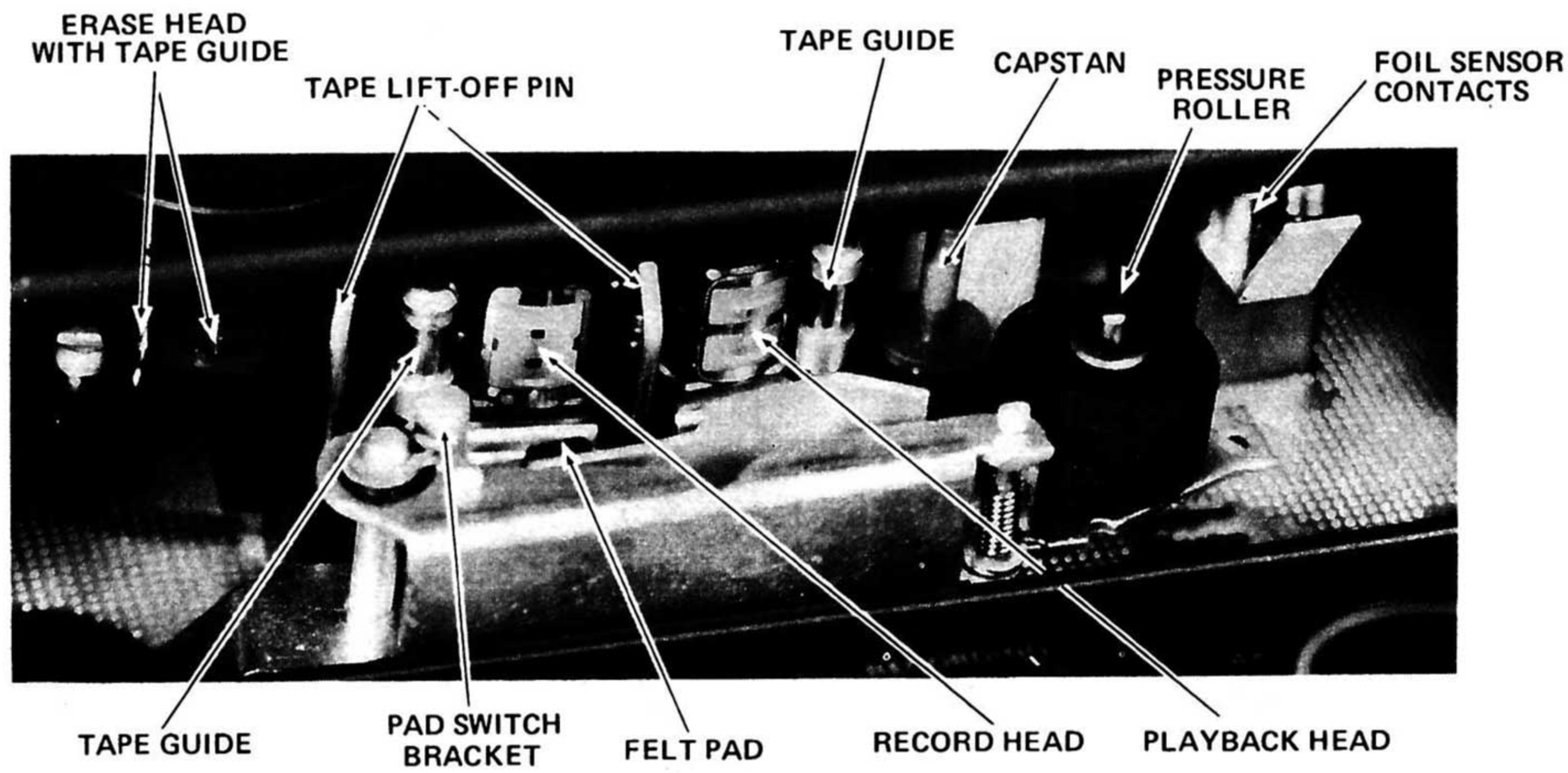

Figure 26

www.hifiengine.com

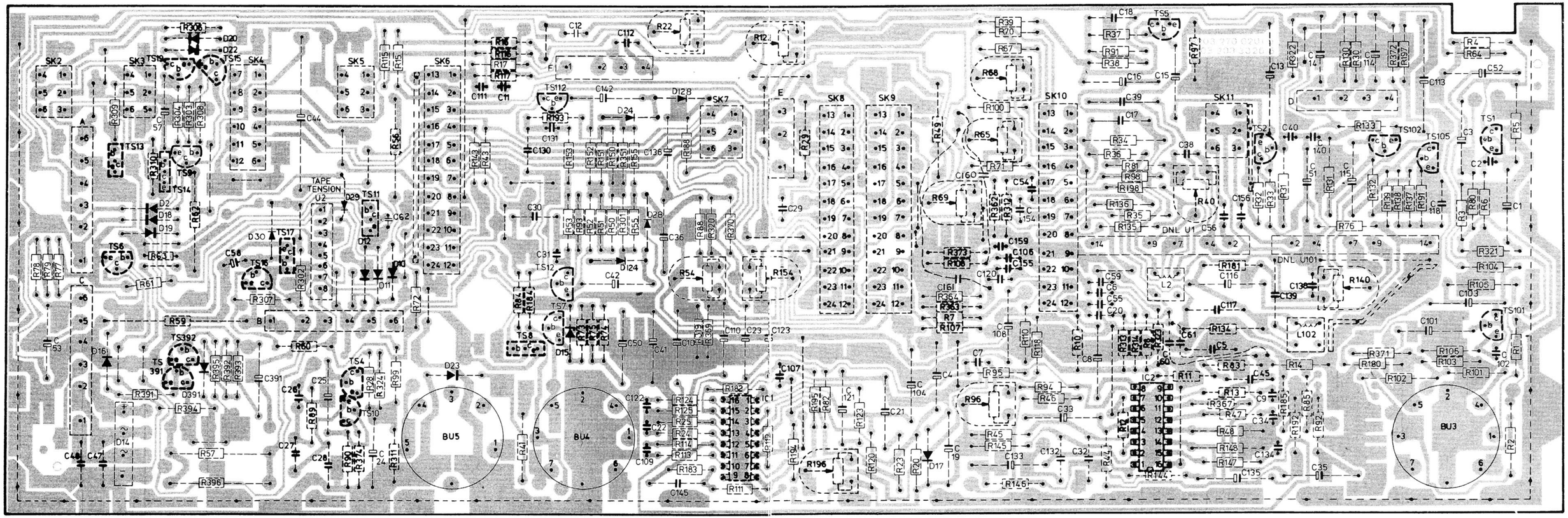

Figure 27 N4504 MA N BOARD (BOTTOM VIEW)

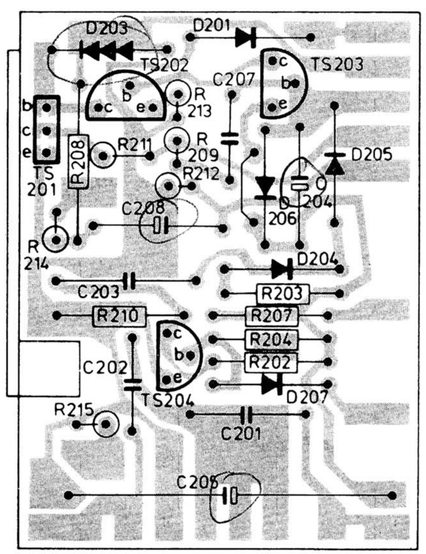

Figure 28
TACHO BOARD (TOP VIEW)

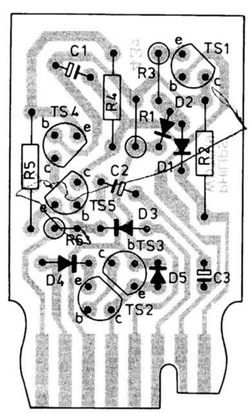

Figure 29
TAPE TENSION BOARD (TOP VIEW)

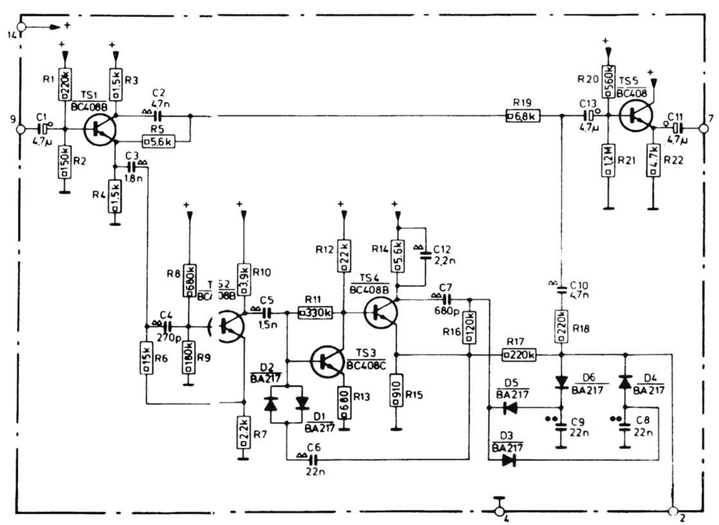

FIGURE 31 DNL BOARD SCHEMATIC DIAGRAM

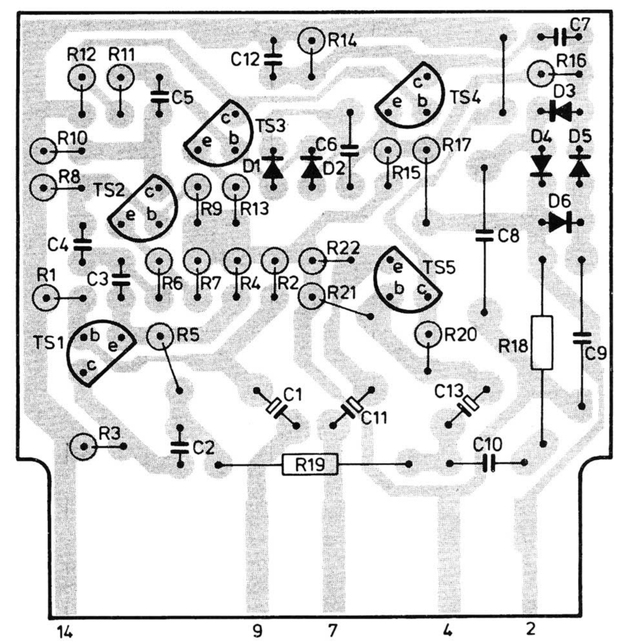

FIGURE 30 DNL BOARD (TOP VIEW)

MECHANICAL REPLACEMENT PARTS LIST (See Figure 19)

REF.	DESCRIPTION	PART NO.
51	Cabinet Front, Upper	4H44330305
52	Long Machine Screw, Black (3 used)	4H50211339
53	Cabinet Front, Lower	4H44330306
54	Short Machine Screw, Black (5 used)	4H50211341
55	Counter Lens	4H38110437
56	Head Cover Assembly	4H44360479
57	Fuse Holder	4H25630152
58	Drive Belt f/Reel Discs (2 used)	4H35830195
59	Reel Disc Assembly, Includes Items 63,64,66, & 67 (2 Assemblies Used)	4H52810304
61	Motor f/Reel Discs (2 used)	4H36120144
62	Grommet	4H32580066
63	Reel Lock (2 used) Part of Item 59	4H53220578
64	Coil Spring (2 used) Part of Item 59	4H49251002
65	Pulley f/Reel Disc Motor (2 used)	4H52880521
66	Washer (2 used) Part of Item 59	4H53220619
67	Screw f/Reel Disc Assembly (2 used) Part of Item 59	4H50211218
68	Compression Spring f/Control Knob (4 used)	4H53210284
69	Control Knob (4 used)	4H41310122
70	Rubber Foot (8 used)	4H46240309
71	Tension Spring	4H49231017
72	Drive Belt f/Counter	4H35830186
73	Erase Head	4H24940064
74	Spring	4H49240591
75	Coil Spring (2 used)	4H49250312
76	Bracket f/Playback Head	4H40260284
77	Slotted Round Nut (4 used)	4H50510199
78	Bracket f/Record Head	4H40260285
79	Playback Head	4H24920038
81	Recording Head	4H24920037
82	Counter Assembly	4H34950078
83	PVC Washer (2 used)	4H53250904
84	Felt Washer	4H53250964
85	Tension Spring	4H49231271
86	Tension Spring	4H49231017
87	Coil Spring	4H49250923
88	Rubber Stop	4H46660611
89	Coil Spring (2 used).	4H49250314
91	Spacer (2 used)	4H53210528
92	Spacer (2 used)	4H53220108
93	Slotted Round Nut (2 used)	4H50510446
94	Capstan Stop	4H40310125
95	Coil Spring	4H49250152
96	Capstan Bearing Assembly	4H52010359
97	Felt Pad	4H46271054
98	Take Off Pins Assembly	4H40350661
99	Pressure Roller Arm	4H40340078
100	Washer (2 used)	4H31040003
101	Pressure Roller	4H52870013

REF.	DESCRIPTION	PART NO.
102	Left Level Meter	4H34710135
103	Right Level Meter	4H34710136
104	Cabinet Rear (Includes 6 Rubber Feet, Item 70)	4H44310055
105	Left Side Panel	4H44340099
106	AC Cord	4H32110236
109	Pulley f/Counter Drive	4H52880619
111	Solenoid f/Mechanical Brakes (RE-2)	4H28070156
112	Bearing Assembly f/Reel Disc (2 used)	4H52010374
113	Disc Damper Assembly, 1 Pair (2 used)	4H53250987
114	Tension Spring (2 used)	4H49231272
115	Tape Tension Arm (2 used)	4H40320123
116	On/Off Switch (SK-0)	4H27610483
117	Power On/Off Button	4H41021709
118	Solenoid f/Pressure Roller Arm (RE-1)	4H28070152
119	Sleeve	4H53230271
121	Tension Spring (6 used)	4H49231273
125	Function Key (Rewind, Wind, Start and Record)	4H40330256
126	Function Button (Rewind, Wind, and Pause)	4H41021712
127	Function Button (Start & Stop)	4H41021711
128	Function Key (Pause)	4H40330257
129	Function Button (Record)	4H41021713
131	Locking Rail	4H41710639
132	Tension Spring	4H49231274
134	Function Key (Stop)	4H40330255
136	Roller (4 used)	4H52890247
137	Leaf Spring (4 used)	4H49240598
138	LED (DNL Indicator)	4H13030904
139	LED Retaining Clip	4H53250906
141	Stereo Jack (Headphones, Microphones)	4H26740255
143	Switch Lever (4 used)	4H40350876
145	Grommet f/Mounting M3 (3 used)	4H32560038
146	Capstan Drive Motor (M3)	4H36120126
147	Nylon Thrust Bearing	4H52030281
148	Drive Belt f/Flywheel	4H35830135
149	Flywheel Assembly	4H52860075
151	Washer (6 used)	4H53250692
152	Coil Spring	4H49251122
153	Braking Arm	4H40350874
154	Tension Spring	4H49231269
156	Right Side Panel	4H46020157
157	Solenoid f/Automatic Stop (RE-3)	4H28070155
158	Lamp Socket (2 used)	4H25510007
159	Support Post f/Horizontal Use (2 used)	4H46240329
160	LED (Power Indicator)	4H13030922
	Dust Cover (Optional Accessory, Not Shown)	N6735

N4504 ELECTRICAL REPLACEMENT PARTS LIST

REF.	DESCRIPTION	PART NO.
	COILS & TRANSFORMERS	
L2	Adjustable Coil (without core)	4H15750735
L102	Adjustable Coil (without core)	4H15750735
T1	Power Transformer	4H14620527
	Core for L2 and L102 (2 used)	4H26630073
	CAPACITORS	
C1	Electrolytic, 1 mfd., 63V	4H12420583
C3	Electrolytic, 4.7 mfd., 63V	4H12420494
C4	Electrolytic, 1 mfd., 63V	4H12420583
C8	Electrolytic, 1 mfd., 63V	4H12420583
C10	Electrolytic, 4.7 mfd., 63V	4H12420494
C13	Electrolytic, 220 mfd., 10V	4H12420589
C14	Electrolytic, 4.7 mfd., 63V	4H12420494
C15	Electrolytic, 2.2 mfd., 63V	4H12420584
C16	Electrolytic, 2.2 mfd., 63V	4H12420584
C17	Polystyrene, 6800 pf., 63V	4H12150538
C19	Electrolytic, 68 mfd., 16V	4H12420469
C21	Electrolytic, 4.7 mfd., 63V	4H12420494
C23	Electrolytic, 2.2 mfd., 63V	4H12420584
C24	Electrolytic, 1 mfd., 63V	4H12420583
C25	Electrolytic, 22 mfd., 10V	4H12420459
C26	Polystyrene, 15 nf., 63V	5H12154119
C27	Polystyrene, 36 nf., 63V	4H12150605
C29	Polystyrene, 9100 pf., 63V	5H12154165
C33	Electrolytic, 2.2 mfd., 63V	4H12420584

REF.	DESCRIPTION	PART NO.
C35	Electrolytic, 22 mfd., 25V	4H12420476
C36	Electrolytic, 4.7 mfd., 63V	4H12420494
C39	Polystyrene, 220 pf., 500V	5H12154059
C41	Electrolytic, 47 mfd., 25V	4H12420477
C42	Electrolytic, 4.7 mfd., 63V	4H12420494
C44	Electrolytic, 680 mfd., 25V	4H12420528
C50	Electrolytic, 15 mfd., 16V	4H12420467
C51	Electrolytic, 68 mfd., 16V	4H12420469
C52	Electrolytic, 33 mfd., 40V	4H12420485
C53	Electrolytic, 22 mfd., 40V	4H12420476
C57	Electrolytic, 10 mfd., 25V	4H12420475
C58	Electrolytic, 47 mfd., 40V	4H12420487
C60	Polystyrene, 100 pf., 500V	4H12150562
C61	Polystyrene, 270 pf., 500V	5H12154047
C101	Electrolytic, 1 mfd., 63V	4H12420583
C103	Electrolytic, 4.7 mfd., 63V	4H12420494
C104	Electrolytic, 1 mfd., 63V	4H12420583
C108	Electrolytic, 1 mfd., 63V	4H12420583
C110	Electrolytic, 4.7 mfd., 63V	4H12420494
C113	Electrolytic, 220 mfd., 10V	4H12420589
C114	Electrolytic, 4.7 mfd., 63V	4H12420494
C115	Electrolytic, 2.2 mfd., 63V	4H12420584
C116	Electrolytic, 2.2 mfd., 63V	4H12420584
C117	Polystyrene, 6800 pf., 63V	4H12150538
C121	Electrolytic, 4.7 mfd., 63V	4H12420494
C123	Electrolytic, 2.2 mfd., 63V	4H12420584
C133	Electrolytic, 2.2 mfd., 63V	4H12420584

www.hifiengine.com

REF.	DESCRIPTION	PART NO.
C135	Electrolytic, 22 mfd.,25V	4H12420476
C136	Electrolytic, 4.7 mfd.,63V	4H12420494
C139	Polystyrene,220 pf.,500V	5H12154059
C142	Electrolytic, 4.7 mfd.,63V	4H12420494
C160	Polystyrene,100 pf.,500V	4H12150562
C161	Polystyrene,270 pf.,500V	5H12154047
C391	Electrolytic, 33 mfd.,40V	4H12420485
C701	Electrolytic, 3300 mfd.,40V	4H12470312
C802	Ceramic Feed Thru,2200 pf.,400V	4H12270084
C803	Ceramic Feed Thru, 2200 pf.,400V	4H12270084
C804	Ceramic Feed Thru, 2200 pf.,400V	4H12270084
C804	Ceramic Feed Thru,2200 pf.,400V	4H12270084
	RESISTORS	
R49	Carbon Film,62 ohm,5%,1W	4H11150389
R56	Wire Wound,47 ohm,5%,4W	4H11221072
R57	Wire Wound, 120 ohm,5%,4W	4H11221083
R59	Wire Wound, 2.2 ohm,10%,2W	4H11360028
R61	Thermistor, 25-50 ohm,50V	4H11640001
R62	Wire Wound, 750 ohm,5%,4W	4H11220104
R70	Metal, 95.3K	5H11650567
R71	Metal, 48.7K	5H11650442
R74	Metal, 4640 ohm	4H11651163
R75	Metal, 5110 ohm	4H11651164
R100	Metal, 191K	5H11654724
R396	Wire Wound, 120 ohm,5%,4W	4H11221083
R820	Wire Wound,100 ohm,5%,4W	4H11221081
	CONTROLS & SWITCHES	
R22	Bias Current Adjust (Left Channel), 22K	4H10010051
R40	Playback Level Cal.,(Left Channel), 220K	4H10010088
R54	Meter Cal., (Left Channel), 47K	4H10010079
R65	4.75 cm/sec Speed Cal.,2200 ohm	4H10010029
R68	9.5 cm/sec Speed Cal.,2200 ohm	4H10010029
R69	19 cm/sec Speed Cal.,2200 ohm	4H10010029
R96	Record Level Cal., (Left Channel), 2200 ohm	4H10010029
R122	Bias Current Adjust (Right Channel), 22K	4H10010051
R140	Playback Level Cal., (Right Channel), 220K	4H10010088
R154	Meter Cal., (Right Channel), 47K	4H10010079
R196	Record Level Cal., (Right Channel), 2200 ohm	4H10010029
R701/751	Headphone Volume, 47K (Dual Control)	4H10230207
R702/752	Headphone Balance,47K (Dual Control)	4H10230215
R703/753	Record Level, 100K (Dual Control)	4H10230219
R704/754	Record Balance,100K (Dual Control)	4H10230221
SK0	On/Off Switch	4H27610483
SK2	Rewind Slide Switch	4H27730591
SK3	Wind (Fast Forward) Slide Switch	4H27730591
SK4	Start Slide Switch	4H27730592
SK5	Pause Slide Switch	4H27730591
SK6	Record Slide Switch	4H27730586
SK7	Monitor Slide Switch	4H27730591
SK8	Track Select Slide Switch	4H27730586
SK9	Track Select Slide Switch	4H27730586
SK10	Speed Select Slide Switch	4H27730586
SK11	DNL Slide Switch	4H27730591
SK13	Tape Tension Leaf Switch	4H27890035
	SEMICONDUCTORS	
D2	Silicon Diode, BY206	4H13030839
D10	Silicon Diode, BY206	4H13030839
D11	Silicon Diode, BY206	4H13030839
D12	Silicon Diode, BY206	4H13030839
D14	Bridge Rectifier, BY225-100	4H13030917
D15	Zener Diode, 8.2V, BZX79-B8V2	5H13034382
D16	Silicon Diode, BAW62	5H13030613
D17	Zener Diode, 8.2V, BZX79-B8V2	5H13034382
D18	Silicon Diode, BAW62	5H13030613
D19	Silicon Diode, BAW62	5H13030613
D20	Silicon Diode, BAW62	5H13030613
D22	Zener Diode, 3.3V, BZY88-C3V3	5H13030392
D23	Zener Diode, 3.3V, BZY88-C3V3	5H13030392

REF.	DESCRIPTION	PART NO.
D24	Silicon Diode, BAW62	5H13030613
D28	Silicon Diode, BAW62	5H13030613
D29	Silicon Diode, BAW62	5H13030613
D30	Silicon Diode, BY206	4H13030839
D124	Silicon Diode, BAW62	5H13030613
D128	Silicon Diode, BAW62	5H13030613
D391	Silicon Diode, BAW62	5H13030613
D701	Light Emitting Diode (DNL Indicator)	4H13030904
D702	Light Emitting Diode (Power Indicator)	4H13030922
D801	Silicon Diode, BAV10	5H13030594
IC1	Integrated Circuit, TCA220	5H20984386
IC2	Integrated Circuit, TCA220	5H20984386
TS1	NPN Silicon, BC549C	4H13040936
TS2	PNP Silicon, BC559B	5H13044358
TS4	NPN Silicon, BC337	4H13040855
TS5	NPN Silicon, BC548C	5H13044196
TS6	PNP Silicon, BC638	4H13041087
TS7	NPN Silicon, BC548B	4H13040937
TS8	PNP Silicon, BD136	5H13040712
TS9	PNP Silicon, BC640	4H13041078
TS10	PNP Silicon, BC327	4H13040854
TS11	NPN Silicon, BD139	5H13040823
TS12	PNP Silicon, BC558	4H13040941
TS13	PNP Silicon, BD238	4H13040917
TS14	PNP Silicon, BD238	4H13040917
TS15	PNP Silicon, BC556	4H13040989
TS16	PNP Silicon, BC558	4H13040941
TS17	PNP Silicon, BD136	5H13040712
TS19	PNP Silicon, BC328	5H13044104
TS101	NPN Silicon, BC549C	4H13040936
TS102	PNP Silicon, BC559B	5H13044358
TS105	NPN Silicon, BC548C	5H13044196
TS112	PNP Silicon, BC558	4H13040941
TS391	PNP Silicon, BC327	4H13040854
TS392	PNP Silicon, BC557	5H13044256
	MISCELLANEOUS	
BU1	Left Microphone Jack	4H26740255
BU2	Headphone Jack	4H26740255
BU3	Line In/Out, DIN Connector	4H26750218
BU4	Monitor, DIN Connector	4H26750218
BU5	Remote, DIN Connector	4H26740233
BU20	Left Line Out, Phono Jack	4H26740256
BU21	Left Line In, Phono Jack	4H26740256
BU101	Right Microphone Jack	4H26740255
BU120	Right Line Out, Phono Jack	4H26740256
BU121	Right Line In, Phono Jack	4H26740256
K1	Recording Head	4H24920037
K2	Playback Head	4H24920038
K3	Erase Head	4H24940064
L801	Ferrite Beads	5H52614018
L802	Ferrite Beads	5H52614018
L803	Ferrite Beads	5H52614018
L804	Ferrite Beads	5H52614018
LA701	Meter Lamp, 6V, 100mA	4H13440326
LA751	Meter Lamp, 6V, 100mA	4H13440326
M1	Supply Reel Motor	4H36120144
M2	Take-up Reel Motor	4H36120144
M3	Capstan Motor	4H36120126
ME701	Left Channel Level Meter	4H34710135
ME751	Right Channel Level Meter	4H34710136
RE1	Pressure Roller Solenoid	4H28070152
RE2	Mechanical Brake Solenoid	4H28070156
RE3	Auto Stop Solenoid	4H28070155
F1	Fuse, 2A, 250V	5H25630083
F2	Fuse, 0.3A, 125V, Slow Blow	4H25350048
	Fuse Holder (2 used)	4H25630152
	AC Cord	4H32110236
	Lamp Socket (2 used)	4H25510007
	DNL Module (2 used)	4H21430238
	Tape Tension Module	4H21430399
	6 Pin Socket (3 used)	4H26740254
	6 Pin Plug (3 used)	4H26630073
	4 Pin Socket (Blue)	4H26740242
	4 Pin Plug (Blue)	4H26440103
	4 Pin Socket (Black)	4H26530119
	4 Pin Plug (Black)	4H26630072
	3 Pin Socket	4H26530121
	3 Pin Plug	4H26630071
	Socket f/DNL Board (2 used)	4H26540127
	Socket f/Tape Tension Board	4H26750156

www.hifiengine.com

TAPE TENSION BOARD REPLACEMENT PARTS LIST

REF.	DESCRIPTION	PART NO.
	CAPACITORS	
C1	Electrolytic, 15 mfd., 40V	4H12420484
C2	Electrolytic, 10 mfd., 25V	4H12420475
C3	Electrolytic, 10 mfd., 25V	4H12420475
	SEMICONDUCTORS	
D1	Diode, BAW62	5H13030613

REF.	DESCRIPTION	PART NO.
D2	Diode, BAW62	5H13030613
D3	Diode, BAW62	5H13030613
D4	Diode, BAW62	5H13030613
D5	Diode, BAW62	5H13030613
TS1	NPN Silicon, BC547	5H13044257
TS2	PNP Silicon, BC327/16	4H13041094
TS3	NPN Silicon, BC548A	4H13040948
TS4	NPN Silicon, BC547A	4H13041019
TS5	NPN Silicon, BC557	5H13044256

TACHO BOARD ELECTRICAL REPLACEMENT PARTS LIST

REF.	DESCRIPTION	PART NO.
	CAPACITORS	
C203	Polystyrene, 6.8 nf.,63V	4H12150538
C204	Electrolytic, 1.5 mfd.,63V	4H12420605
C205	Electrolytic, 470 mfd.,25V	4H12420527
C208	Electrolytic, 33 mfd.,40V	4H12420485
	SEMICONDUCTORS	
D201	Diode, BY206	4H13030839

REF.	DESCRIPTION	PART NO.
D203	2.1V Zener Diode, BZX75/C2V1	5H13034049
D204	Diode, BAW62	5H13030613
D205	Diode, BAW62	5H13030613
D206	Diode, BAW62	5H13030613
D207	Diode, BAW62	5H13030613
TS201	PNP Silicon, BD136	5H13040712
TS202	NPN Silicon, BC548	4H13040938
TS203	PNP Silicon, BC558	4H13040941
TS204	NPN Silicon, BC548C	5H13044196

DNL BOARD REPLACEMENT PARTS LIST

REF.	DESCRIPTION	PART NO.
	CAPACITORS	
C1	Electrolytic, 4.7 mfd., 63V	4H12420494
C11	Electrolytic, 4.7 mfd., 63V	4H12420494
C13	Electrolytic, 4.7 mfd., 63V	4H12420494
	SEMICONDUCTORS	
D1	Diode, BAW62	5H13030613

REF.	DESCRIPTION	PART NO.
D2	Diode, BAW62	5H13030613
D3	Diode, BAW62	5H13030613
D4	Diode, BAW62	5H13030613
D5	Diode, BAW62	5H13030613
D6	Diode, BAW62	5H13030613
TS1	NPN Silicon, BC549B	4H13040936
TS2	NPN Silicon, BC549B	4H13040936
TS3	NPN Silicon, BC548B	4H13040937
TS4	NPN Silicon, BC548B	4H13040937
TS5	NPN Silicon, BC548B	4H13040937

SERVICE NOTES

www.hifiengine.com

PHILIPS